FE-PH-044
SNS Front-End Systems Technical Note
FE3000
29 November 2000

# Dual-Frequency Matching Network for Ion Source Antenna

John Staples

This technical note is intended exclusively for internal use inside the SNS Front-End Systems Group. The primary purpose of the technical note series is to promote rapid dissemination of results for work in progress. No formal review has taken place to ascertain the accuracy of its contents, or the consistency / compatibility of the information with other SNS work.

FE-PH-044
SNS Front-End Systems Technical Note
FE3000
29 November 2000

# Dual-Frequency Matching Network for Ion Source Antenna

John Staples

It has been suggested that an alternate method of ignition of the plasma in the r.f.-excited SNS H- ion source is by application of a continuous application of 13.56 MHz power to the plasma as a "keep-alive" excitation. During the 1 msec extraction pulse, high-power 2 MHz power is supplied to the same antenna.

While this can be accomplished with two separate antennas, one excited by the 13.56 MHz continuous power, and the other by pulsed 2 MHz power, the physical arrangement of providing two antennas complicates the design of the source.

A matching network that allows two r.f. power sources to excite a single antenna allows one to use the existing source configuration as it is, and should be adaptable to different antenna geometries (1-1/2 turn, 2-1/2 turn, e.g.).

The design of the matching network presents some challenges, as the two input ports for the two r.f. amplifiers must be isolated from each other.

The network in Figure 1 is a solution. The upper branch matches the 2 MHz generator to the antenna, and uses the same circuit values as the present matching network. The second (lower) branch uses the same circuit topology for the 13.56 MHz channel.

The 2 MHz branch is a high-C, low-L resonator comprising C2 and L1, which has been empirically found to optimize the stability, particularly with the 1-1/2 turn quartz antenna. The 13.56 MHz branch is a low-C, high-L resonator comprising C4 and L2.

The different L/C ratios provide the isolation between the two branches. At 2 MHz, the small capacitors C3 and C4 provide a high-impedance load on the antenna and low transmission back to the 13.56 MHz generator. The large inductance L1 provides good isolation from the 13.56 MHz generator back to the 2 MHz generator.

As the 2 MHz generator power is much higher than the 13.56 MHz power, the isolation from the 2 to 13.56 MHz port is larger and is -47 dB, assuming each generator itself represents a matched 50 ohm load. The isolation from the 13.56 to 2 MHz port is -17 dB, which should be adequate. In reality, each generator will present a highly reactive impedance at the operating frequency of the other, and the isolation will be different, and probably even more.

The circuit values and rms voltages and current through each component is as follows for a typical tune. The input power is 20 kW rms at 2 MHz and 1.25 kW rms at 13.56 MHz.

| Element | Value | rms voltage | rms current |
|---|---|---|---|
| C1 | 220 pF | 7.2 kV | 20 amps |
| C2 | 1760 pF | 7.4 kV | 164 amps |
| L1 | 2.7 μH | 6.2 kV | 184 amps |
| | | | |
| C3 | 6.05 pF | 9.6 kV | 4.9 amps |
| C4 | 61 pF | 9.6 kV | 50 amps |
| L2 | 1.6275 μH | 7.6 kV | 55 amps |

The antenna parameters, experimentally measured for the 1-1/2 turn quartz antenna, including lead resistance to the network, are 0.51 μH and 0.58 ohms.

With the above powers from each transmitter, the rms antenna current and voltage at 2 MHz are 1.1 kV and 185 amperes, and the 13.56 MHz are 2 kV and 46 amperes. The peak-to-peak values are $\sqrt{8} = 2.83$ times the rms values.

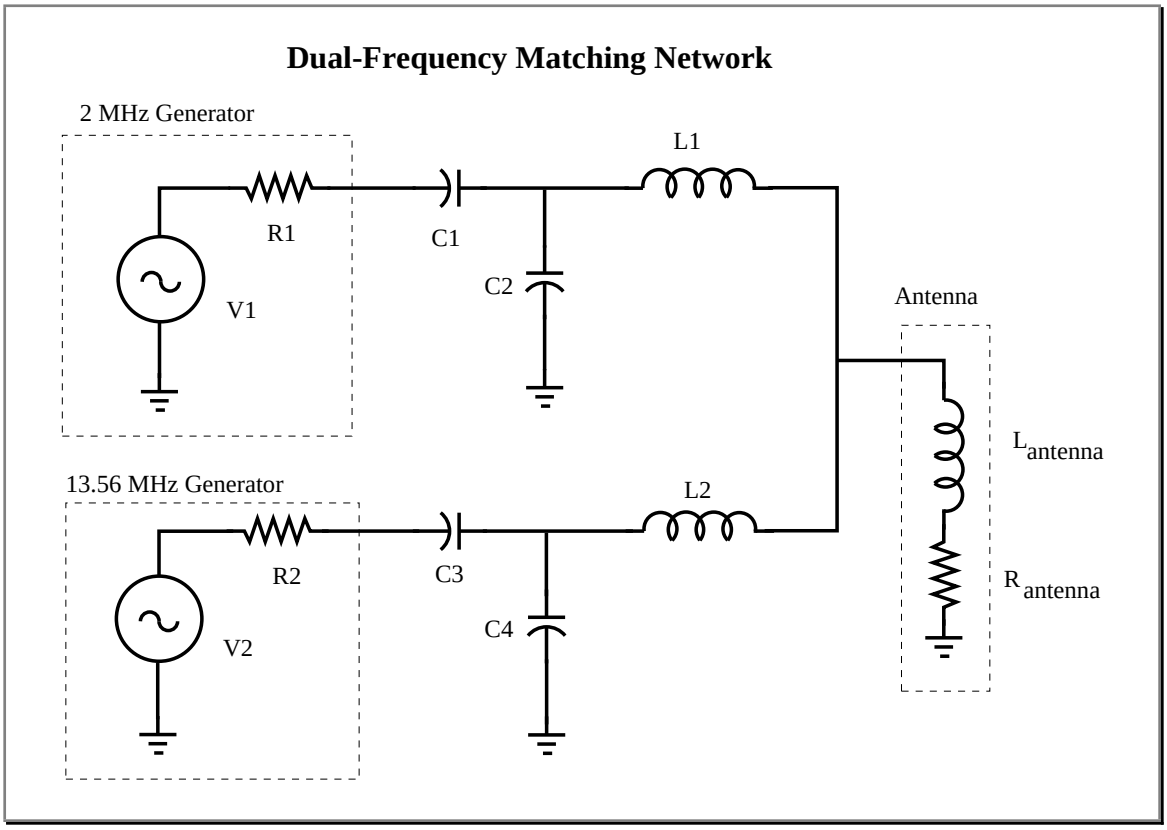


Figure 1. Dual-frequency matching network

Figure 2  shows a scan from 1 to 15 MHz, with both generators providing power.  The resonances at 2 and 13.56 MHz are clearly evident.

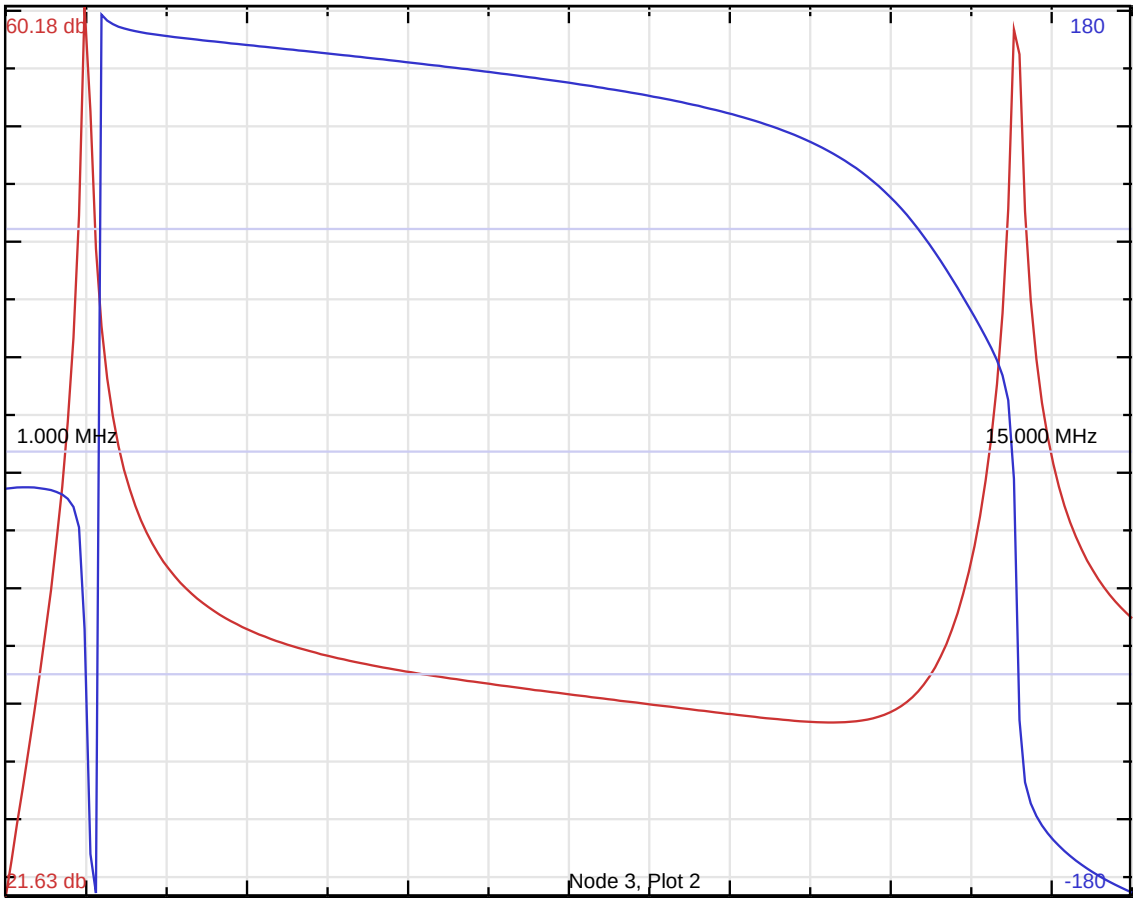


Figure 2.  Amplitude response vs. Frequency

The network can be built by adding a second channel onto the existing network.  The 2 MHz channel tuning is not significantly affected by the addition of the second branch. The components in the second bracnch are much smaller in capacitance, but the voltage rating must be in the 10 kV range.