Program - Project - Job: **SNS-FE MEBT, Mechanical Transport Systems**

Title: **MEBT Quadrupole Magnet Design Package**

TABLE OF CONTENTS

1.0 **SCOPE** 2
1.1 Design Requirements 2
1.2 Magnet Description 2
1.3 APT/LEDA Prototypes 3

2.0 **MAGNETIC ANALYSIS** 4
2.1 APT/LEDA Prototype Measurements 4
2.2 Dependence of Emittance Growth on Field Quality 4

2.0 **MECHANICAL DESIGN** 4
3.1 Steel Core 4
3.2 Quadrupole Coils 4
3.3 Steering Coils 4
3.4 Copper Conductor Flags and Bus Bar 4
3.5 Power Cables 5

4.0 **POWER SUPPLIES** 5
4.1 Main Coil Power Supplies 5
4.2 Steering Coil Power Supplies 5

5.0 **FABRICATION DOCUMENTS** 6
5.1 Drawing List 6
5.2 Fabrication Specifications 7

6.0 **REFERENCES** 7

APPENDIX A
MEBT Quadrupole Locations (graphic)

APPENDIX B
Drawings

1.0 SCOPE

This document describes the design for the Front End (FE) Medium Energy Beam Transport (MEBT) Quadrupole magnets for the Spallation Neutron Source (SNS). It references all relevant technical notes , specifications, and part and assembly drawings which describe the magnet fabrication and performance requirements.

1.1 Design Requirements

The MEBT contains eight magnets with an aperture diameter of 32 mm and six magnets with an aperture diameter of 42 mm. Tech. Note FE-PH-026 [1] specifies the required nominal gradient, aperture, and effective length for each magnet. The gradients range from approximately 16 to 34 T/m for 32 mm bore magnets and 12 to 26 T/m for 42 mm bore magnets. Tech. Note FE-PH-031 [2] specifies the required tuning range for the magnets over and above nominal operating gradients. The closely packed MEBT lattice leaves very little longitudinal space for quadrupoles. The magnets were designed to have an effective magnetic length of 6 to 7 cm.

1.2 Magnet Description

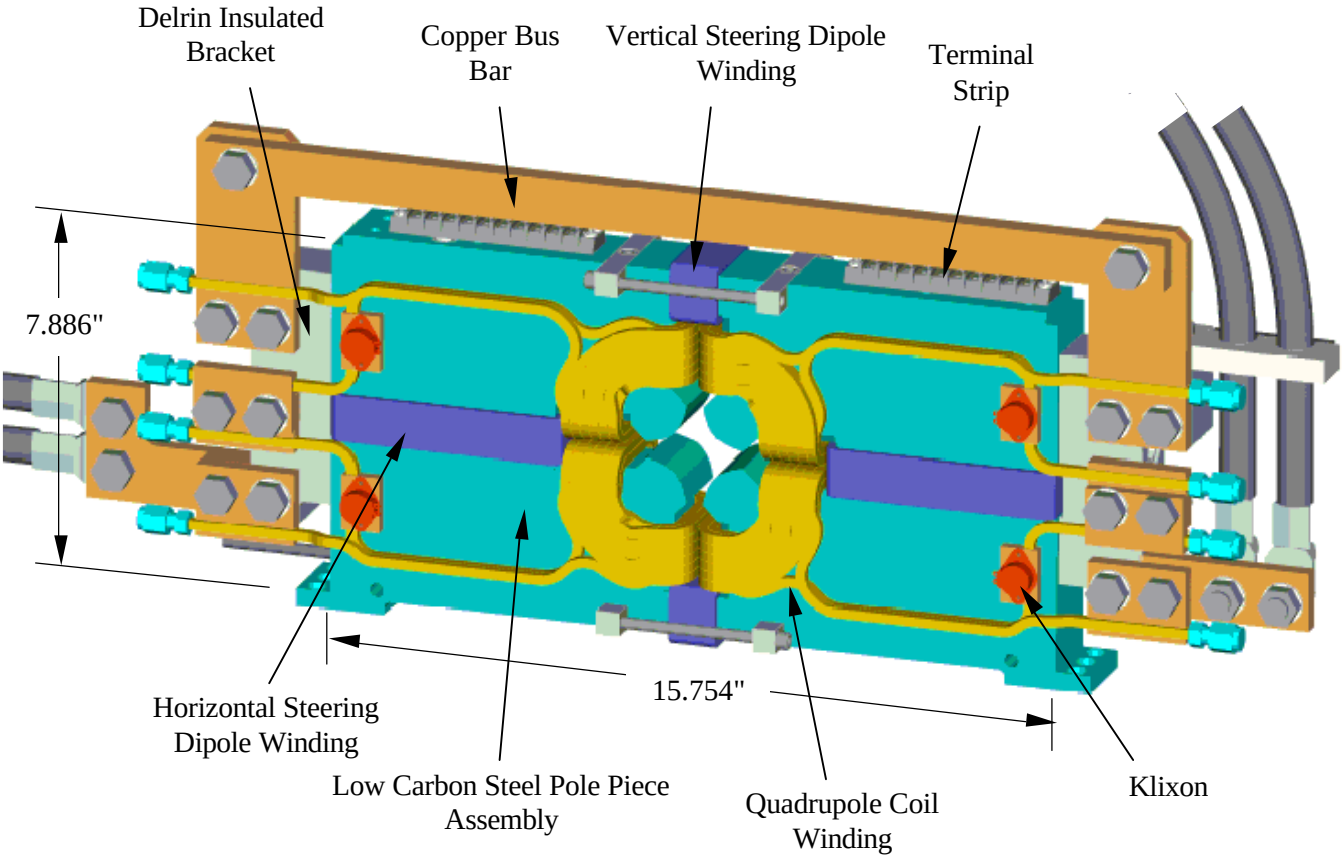

MEBT Quadrupole Magnet with Steering Coils

The magnets have a 4.5 cm thick solid core of low carbon steel which is assembled out of four quadrants. The right and left halves are bolted and pinned together such that the magnet can be assembled around the beam pipe.

The nominal operating currents of the magnets range from 100 to 400 Amps at voltages from 3 to 10 volts. The nominal temperature rise in the cooling water ranges from 2 to 12 ?C. The nominal and maximum values for electrical and mechanical parameter are tabulated for all of the magnets in Tech. Note FE-ME-022A [3].

Six of the fourteen MEBT quadrupoles have back-leg, steering corrector coils. These coils provide a steering correction of one to two milliradians. The steering coils are described in Tech. Note. FE-ME-013 [4].

1.3 APT/LEDA Prototypes

The MEBT quadrupole magnet is based on a magnet designed at Los Alamos National Lab (LANL) for the APT/LEDA project by Ted Hunter.

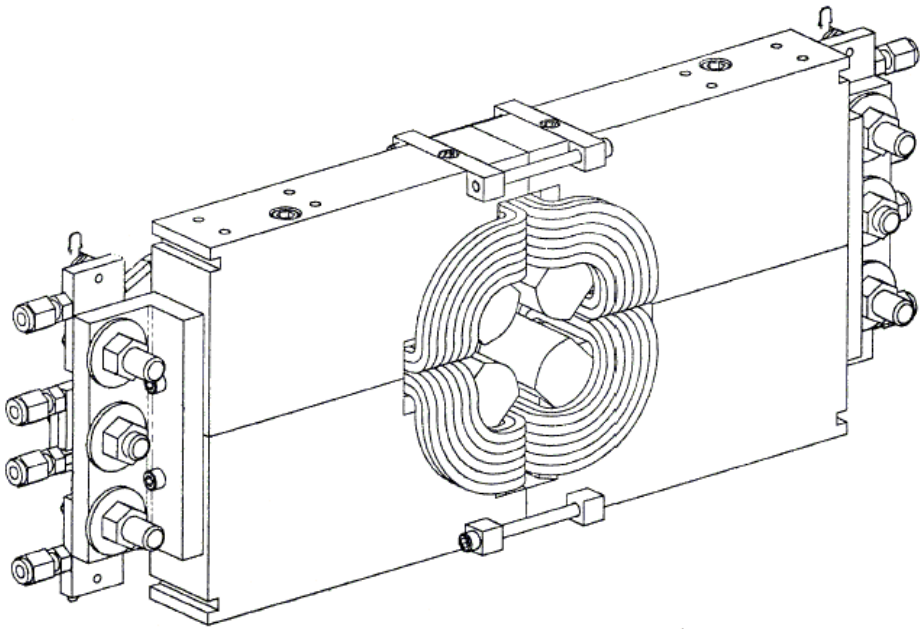

APT/LEDA CCDTL 3.2 cm Bore Quadrupole (Prototype built by MCT Industries)

In collaboration with MCT Industries in Albuquerque, LANL developed tooling and procedures for winding and epoxy impregnating the quadrupole coils and a technique for fabricating and assembling the steel yokes. With the exception of fiducial notches and mounting surfaces on the corners, the steel core is very similar to the LANL design. The quadrupole coils are identical to those developed by LANL except that the leads are one inch longer.

LANL built both 3.2 and 4.8 cm bore prototype magnets with the same main coils and similar steel geometry. Magnetic measurements were performed on both prototypes. Tests were performed which showed good repeatability of measurement results between two identical magnets and before and after disassembly about the vertical centerline [8] [9] [10].

2.0 MAGNETIC ANALYSIS

2.1 APT/LEDA Prototype Measurements

Because the design is based closely upon the APT/LEDA magnet, very little magnetic analysis was performed. The pole tip geometry is nearly identical for the 3.2 cm bore magnet and similar for the 4.2 cm bore geometry to prototype magnets. Magnetic measurements showed the field quality of all of the LANL prototypes (better than 99 percent quadrupole at 90 percent of the aperature) to be adequate to suit the field quality requirements for the MEBT quadrupoles [9] [10].

2.2 Dependence of Emittance Growth on Field Quality

An FEA analysis was performed of the 4.2 cm MEBT quadrupole which determined that the growth in emittance of the beam due to multipole field components was well within acceptable limits. The analysis and results are described in FE-ME-021 [6].

The emittance growth resulting from the sextupole component of the dipole steering fields is discussed in Tech. Notes FE-ME-013 [4] and FE-PH-027 [5].

3.0 MECHANICAL DESIGN

The magnet was designed such that all components of the assembly would be identical, regardless of the bore size of the finished magnet, with the exception of the pole tip profiles.

3.1 Steel Core

The mating and external surfaces of the four core quadrants are machined separately and then bolted and pinned together. The pole tips, fiducial notches, and mounting surfaces are cut into the assembly using a wire EDM machine to a profile tolerance of .001 in. The quadrants are then disassembled and electroless nickel plated.

3.2 Quadrupole Coils

The quadrupole coils consist of twelve turns of .1875 in. square conductor with a .125 in. cooling hole. The overall length of the coils, less than 7 cm, enables the magnets to fit into the narrow gaps in the beamline between adjacent components. The conductor is half-lapped with kapton tape and then wound onto a mandrel. After winding, the coils are impregnated with epoxy and cured at room temperature.

3.3 Steering Coils

The vertical and horizontal steering coils are wound out of square wire with heavy build insulation. The coils will be wound on a mandrel and painted with an epoxy during winding. The epoxied winding will be wrapped with an insulating tape to form a finished coil.

3.4 Copper Conductor Flags and Bus Bar

The bus bar and copper flags have been sized such that the maximum current flowing through any given cross-section is less than 1000 A/in^2. All flags are fastened with two bolts; one through the delrin insulating bracket and the other fastening directly to the next flag. Bellville washers are included in all the bolted joints between flags.

3.5 Power Cables

Because the maximum operating current of some of the magnets could be in excess of 400 Amps, the power flags can accommodate two 200 Amp capacity stranded cables (0000 cable). The power cable bracket provides strain relief to the cable connections and can bolt to the insulating bracket on either side of the magnet.

4.0 POWER SUPPLIES

4.1 Main Coil Power Supplies

There are a total of eleven main coil power supplies. All magnets on the first and third raft have individual power supplies while those on the second raft are powered in pairs in series. The power supply regulation will be 0.1 percent or better. The main coil power supply operating ranges are given in FE-ME-022A [3].

4.2 Steering Coil Power Supplies

There are a total of twelve steering coil power supplies. The first and last magnets on each of the three rafts have horizontal and vertical steering dipole windings. Each steering magnet will have a separate supply powering pairs of steering coils in series in each plane. The power supply regulation will be 0.1 percent or better. The steering coil power supply operating ranges are given in FE-ME-013 [4].

5.0 FABRICATION DOCUMENTS

5.1 Drawing List - active links shown in blue

ITEM	TITLE	LBNL DWG NO.
1	Steering Coil Mandrels	25B101_6_A
2	Assembly Shipment Box	25B102_6
3	CMM Inspection Data	25B103_6
4	Quad Fixture Layout	25B104_6
5	Plating Shipment Box	25B105_6
6	Plating - Typical for Coil Assembly	25B106_4
7	Narrow Lower Flag	25B120_4
8	Center Overlapping Flag	25B122_4_A
9	Crossbar	25B123_4
10	Fitting Modified	25B124_4_A
11	Insulator Block	25B125_4_A
12	Pole Piece - Top	25B126_4_F
13	Pole Piece - Bottom	25B127_4_D
14	Left Coil Winding	25B128_4_A
15	Right Coil Winding	25B129_4_A
16	Pole Piece Assembly - LH	25B132_4_B
17	Pole Piece Assembly - RH	25B133_4_B
18	Pole Piece Assembly - 32 MM Aperture	25B134_6_C
19	Pole Piece Assembly - 42 MM Aperture	25B136_6_C
20	Jumper Bar Flag	25B140_4_A
21	Jumper Bar	25B141_4_A
22	L-Shaped Bus Bar	25B142_4_B
23	Straight Bus Bar	25B143_4_A
24	Thermostat Mounting Plate	25B144_4_B
25	Thermostat Assembly	25B145_4_A
26	Vertical Steering Coil	25B146_4_B
27	Horizontal Steering Coil	25B147_4_B
28	Upper Left Coil Assembly	25B148_4_C
29	Upper Right Coil Assembly	25B149_4
30	Lower Left Coil Assembly	25B150_4_C
31	Lower Right Coil Assembly	25B151_4
32	VOID (Modified Terminal Block)	25B152_4
33	Power Cable	25B153_4
34	Ground Cable	25B154_4
35	Power Cable Bracket	25B155_4_A
36	Cable Bracket Strap	25B156_4
37	32 MM Aperture Quadrupole with Steering	25B157_6_C
38	32 MM Aperture Quadrupole w/o Steering	25B158_6_C
39	42 MM Aperture Quadrupole with Steering	25B159_6_C
40	42 MM Aperture Quadrupole w/o Steering	25B160_6_C
41	Left Coil Winding - Terminal Detail	25B161_4
42	Right Coil Winding - Terminal Detail	25B162_4
43	Power and Water Connections	25B418_6
44	Terminal Block Wiring	25B419_3

5.2 Fabrication Specifications

SPECIFICATION TITLE	BERKELEY LAB SPEC. NUMBER
Quadrupole Magnet Fabrication and Assembly	M912
Copper Magnet Conductor	M919
Kapton Insulation for 0.187 Square by 0.125 ID Copper Conductor	M920

6.0 REFERENCES

[1] John Staples, 11-8-99, *MEBT Quadrupole Gradients*, SNS FE-PH-026.

[2] John Staples, 8-31-99, *MEBT Quad Tuning Range*, SNS FE-PH-031.

[3] Daryl Oshatz, 9-29-99, *MEBT Quadrupole Operating Parameters*, SNS FE-ME-022A.

[4] Daryl Oshatz, 8-27-99, *MEBT Quadrupole Steering Coils*, SNS FE-ME-013.

[5] John Staples, 9-3-99, *MEBT Emittance Growth Due to Quad Steering Correction*, SNS FE-PH-027.

[6] Daryl Oshatz, John Staples, 9-28-99, *MEBT Quadrupole Field Harmonics Study*, SNS FE-ME-021.

[7] Daryl Oshatz, Yoshy Minamihara, John Staples and Richard DiGennaro, 1-04-00, *MEBT Quadrupole Magnet Final Design Review November 17,1999*, SNS FE-ME-024.

[8] D. Barlow, 9-30-98, *Magnetic Measurements of Two Prototype Quads for the APT/LEDA CCDTL*, LANSCE-1:TNM-98-264 (LANL).

[9] D. Barlow, 3-22-99, *Magnetic Measurements of a Prototype APT CCL-1 Quad*, LANSCE-1:TNM-99-052 (LANL).

[10] D. Barlow, 4-22-99, *Magnetic Measurements of APT/LEDA CCDTL Quad Fabricated by MCT*, LANSCE-1:TNM-99-072 (LANL).

MEBT Quadrupole Locations

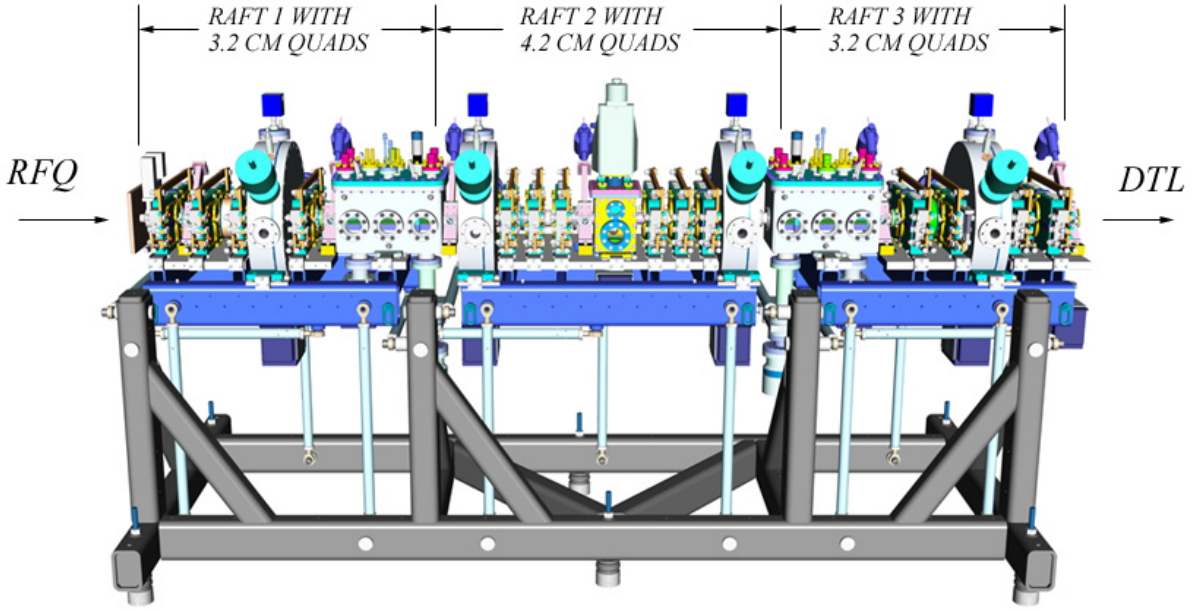

Drawings

PART D1

MAT'L: .015" NEMA SHEET
QUANT: FIFTY

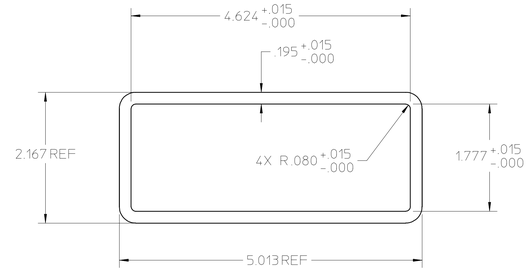

NOTE: 1. CONTACT TOM WEST FOR THE MATERIAL @ X5904.

PART A1

MAT'L: ALUM ALLOY
QUANT: ONE

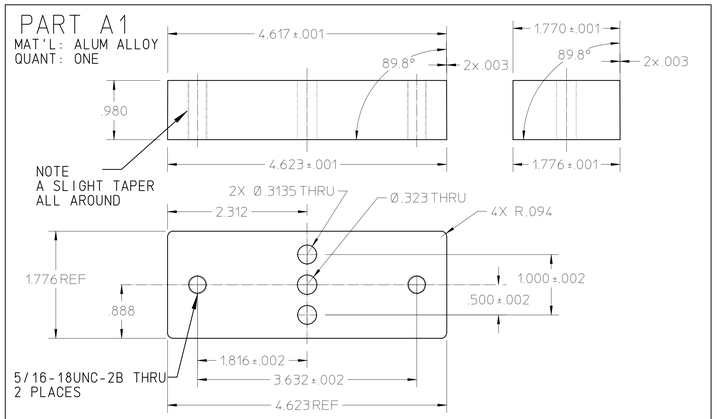

NOTE: ALL DIMENSIONS TO BE WITHIN PLUS/MINUS .005" UNLESS OTHERWISE NOTED.

PART B1

MAT'L: ALUM ALLOY
QUANT: TWO

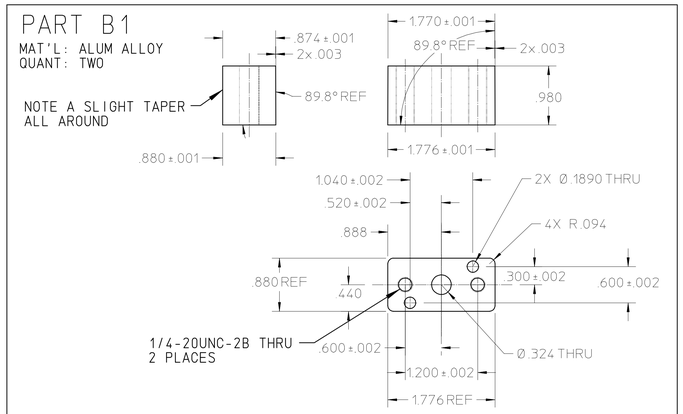

NOTE: ALL DIMENSIONS TO BE WITHIN PLUS/MINUS .005" UNLESS OTHERWISE NOTED.

PART E1

MAT'L: .015" NEMA SHEET
QUANT: FIFTY

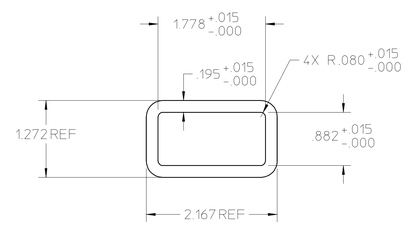

NOTE: 1. CONTACT TOM WEST FOR THE MATERIAL @ X5904.

PART A2

MAT'L: ALUM ALLOY
QUANT: TWO

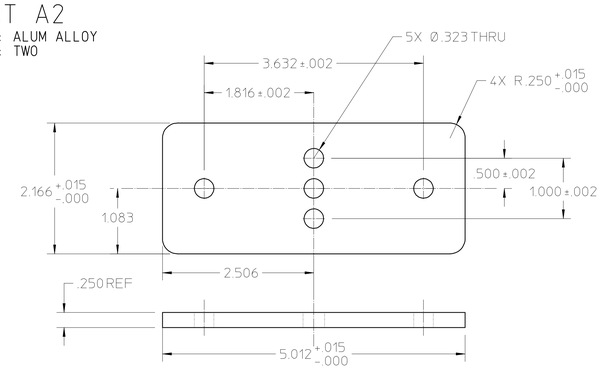

NOTE: ALL DIMENSIONS TO BE WITHIN PLUS/MINUS .005" UNLESS OTHERWISE NOTED.

PART B2

MAT'L: ALUM ALLOY
QUANT: FOUR

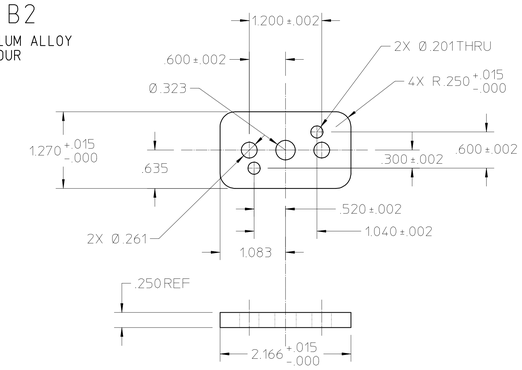

NOTE: ALL DIMENSIONS TO BE WITHIN PLUS/MINUS .005" UNLESS OTHERWISE NOTED.

PART A3

MAT'L: ALUM ALLOY
QUANT: ONE

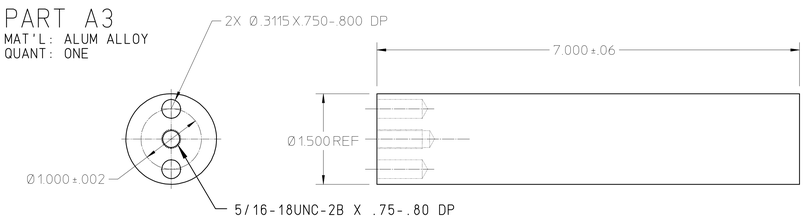

NOTE: ALL DIMENSIONS TO BE WITHIN PLUS/MINUS .005" UNLESS OTHERWISE NOTED.

PART B3

MAT'L: ALUM ALLOY
QUANT: TWO

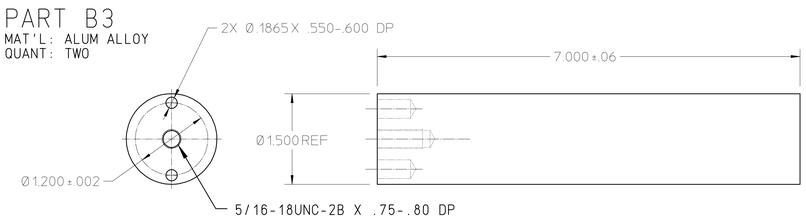

NOTE: ALL DIMENSIONS TO BE WITHIN PLUS/MINUS .005" UNLESS OTHERWISE NOTED.

25B1016

REV	DWG	CHK	ZONE	DATE	CHANGES
A	PL	DPO		01-10-98	TITLE WORD 'MANDREL' WAS 'MANDRIL'

REQD	ITEM	PART NO.	DESCRIPTION

UNLESS OTHERWISE SPECIFIED
TOLERANCES: X ± - FRAC. ± 1/64; .XX ± - ANGLES ± 1°; .XXX ± - FINISH 125√
THREADS ARE CLASS 2
CHAMFER ENDS OF ALL SCREW THREADS 30° OUT 1.5 PITCH THRU RELIEF WITH ROUND NOSE TOOL ON MACHINE CUT THREADS.
BREAK EDGES .016 MAX. ON MACHINED WORK.
REMOVE BURRS WELD SPLATTER & LOOSE SCALE
REFERENCES: ANSI Y14.5 & B46.1.

SHOP ORDERS
ACCT. NO. | SERIAL NO.
DATE ISSD | DATE REQD | NO. REQD
DELIVER TO
SURFACE TREATMENT: DEGREASE
IDENT. METH: TAG
DWG BY: Y. MINAMIHARA | DATE: 11-13-00
CHK BY | DATE

LAWRENCE BERKELEY LABORATORY
UNIVERSITY OF CALIFORNIA-BERKELEY

SNS - FE MEBT
QUADRUPOLE MAGNET
STEERING COIL MANDRELS

PATENT CLEAR | DWG. TYPE: PART(S) | SHOWN ON | SCALE: FULL | DO NOT SCALE PRINTS
MICROFILMED | DESIGN ACCT. NO. | CATEGORY CODE: FE3312 | DWG NO.: 25B1016 | SIZE | REV.: A

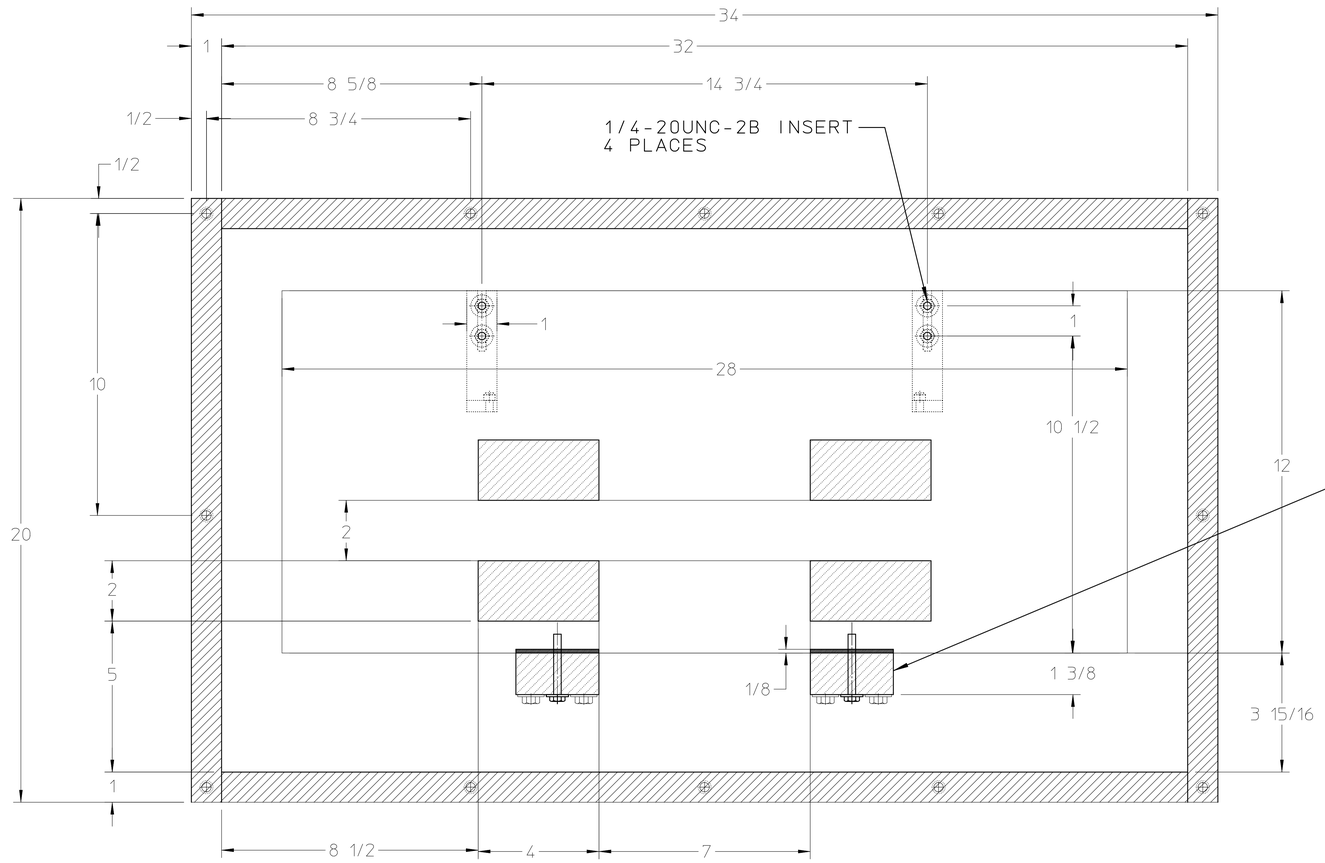

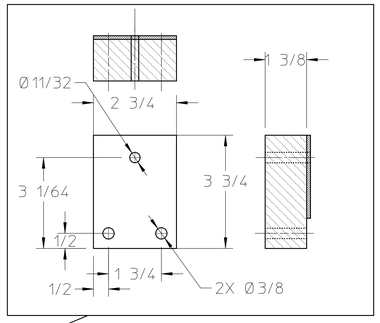

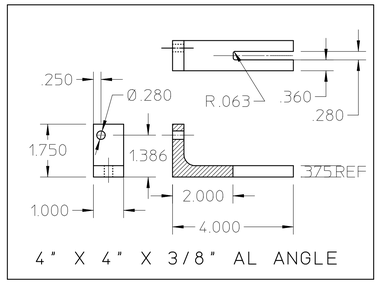

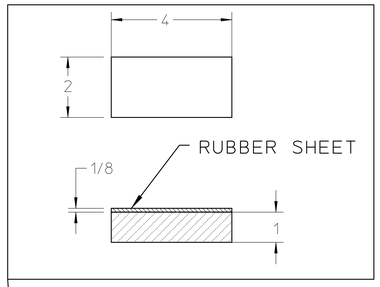

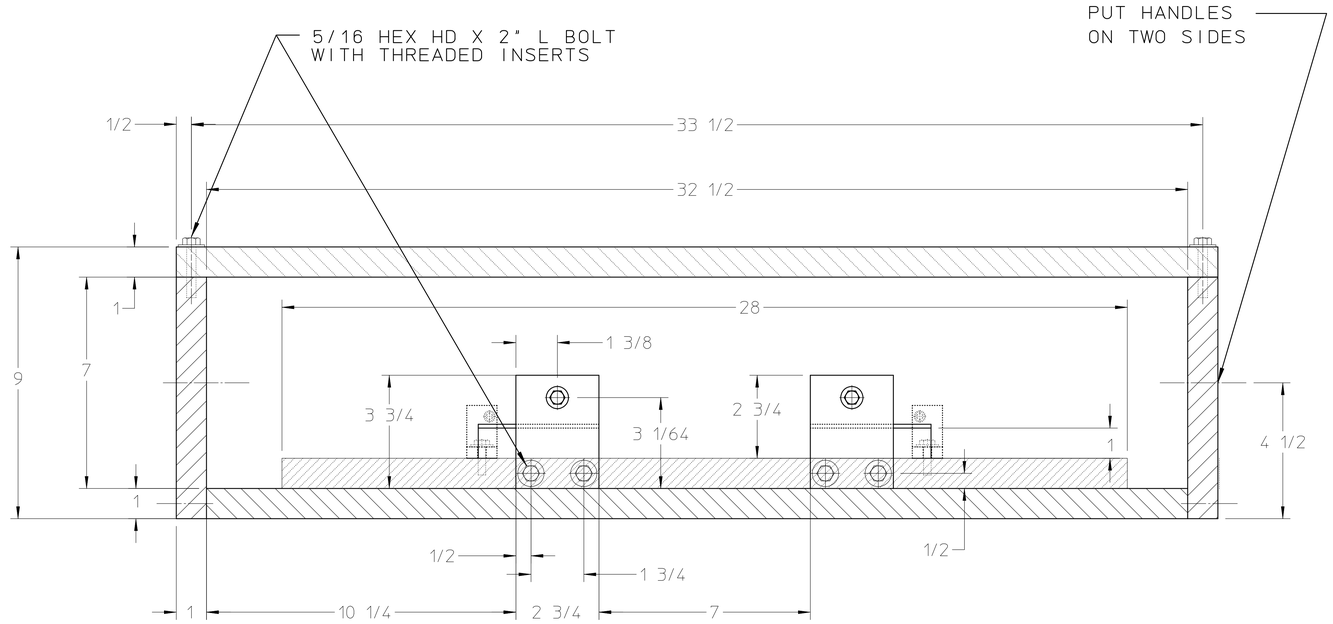

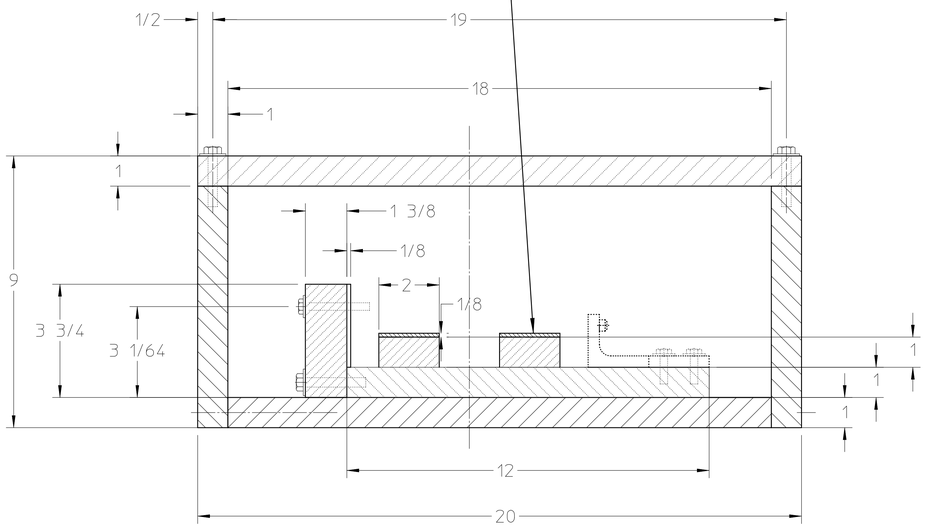

25B1026

REQD	ITEM	PART NO.	DESCRIPTION

REV	DWG	CHK	ZONE	DATE	CHANGES

UNLESS OTHERWISE SPECIFIED
TOLERANCES: .X ± – FRAC. ± 1/64; .XX ± – ANGLES ± 1°; .XXX ± – FINISH 125√
THREADS ARE CLASS 2
CHAMFER ENDS OF ALL SCREW THREADS 30°
CUT 1.5 PITCH THRD RELIEF WITH ROUND NOSE TOOL ON MACHINE CUT THREADS.
BREAK EDGES .016 MAX. ON MACHINED WORK
REMOVE BURRS WELD SPLATTER & LOOSE SCALE
REFERENCES: ANSI Y14.5 & B46.1

SHOP ORDERS
ACCT. NO. | SERIAL NO.
DATE ISSD | DATE REQD | NO. REQD
DELIVER TO
SURFACE TREATMENT: DEGREASE
IDENT. METH.: TAG
DWG. BY: Y. MINAMIHARA | DATE: 11-13-00
CHK. BY: | DATE

LAWRENCE BERKELEY LABORATORY
UNIVERSITY OF CALIFORNIA-BERKELEY

SNS - FE MEBT
QUADRUPOLE MAGNET
ASSEMBLY SHIPMENT BOX

PATENT CLEAR	DWG. TYPE	SHOWN ON	SCALE	DO NOT SCALE PRINTS
	ASSEMBLY		HALF	
MICROFILMED	DESIGN ACCT. NO.	CATEGORY CODE	DWG. NO.	SIZE / REV
		FE3312	25B1026	

POLE	AL	AR	BL	BR	CL	CR	DL	DR	ZL*	ZR*
25B1346-1	-4.2330	3.6840	7.6264	8.6272	-4.2339	3.6831	-7.6280	-8.6259	1.7613	1.7614
25B1346-2	-4.2329	3.6628	7.6257	8.6263	-4.2332	3.6824	-7.6276	-8.6255	1.7613	1.7614
25B1346-3	-4.2317	3.6839	7.6261	8.6266	-4.2333	3.6827	-7.6270	-8.6253	1.7614	1.7614
25B1346-4	-4.2307	3.6852	7.6262	8.6271	-4.2333	3.6824	-7.6270	-8.6251	1.7612	1.7612
25B1346-5	-4.2315	3.6839	7.6261	8.6262	-4.2326	3.6829	-7.6267	-8.6254	1.7614	1.7612
25B1346-6	-4.2317	3.6837	7.6262	8.6265	-4.2332	3.6829	-7.6271	-8.6253	1.7613	1.7612
25B1346-7	-4.2319	3.6838	7.6259	8.6263	-4.2331	3.6825	-7.6272	-8.6253	1.7612	1.7613
25B1346-8	-4.2319	3.6837	7.6270	8.6264	-4.2324	3.6834	-7.6263	-8.6253	1.7613	1.7613
25B1346-9	-4.2319	3.6841	7.6263	8.6265	-4.2327	3.6832	-7.6272	-8.6255	1.7613	1.7613
25B1366-1	-4.2317	3.6836	7.6264	8.6261	-4.2326	3.6827	-7.6268	-8.6259	1.7612	1.7612
25B1366-2	-4.2319	3.6838	7.6262	8.6265	-4.2326	3.6835	-7.6267	-8.6251	1.7612	1.7612
25B1366-3	-4.2319	3.6834	7.6262	8.6263	-4.2329	3.6823	-7.6269	-8.6253	1.7613	1.7613
25B1366-4	-4.2309	3.6842	7.6263	8.6258	-4.2319	3.6831	-7.6264	-8.6256	1.7613	1.7613
25B1366-5	-4.2320	3.6834	7.6267	8.6262	-4.2332	3.6824	-7.6266	-8.6259	1.7613	1.7613
25B1366-6	-4.2320	3.6834	7.6267	8.6262	-4.2332	3.6824	-7.6266	-8.6259	1.7614	1.7614
25B1366-7	-4.2317	3.6839	7.6262	8.6264	-4.2330	3.6825	-7.6270	-8.6254	1.7614	1.7614

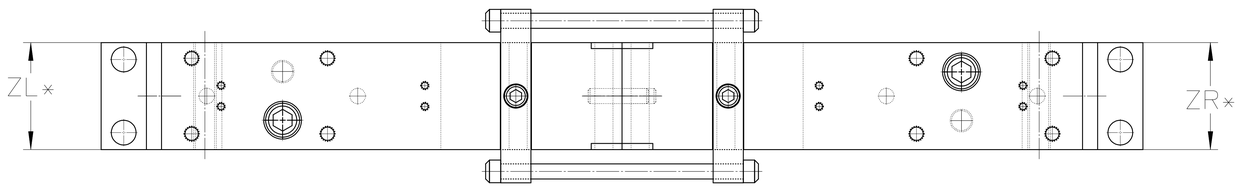

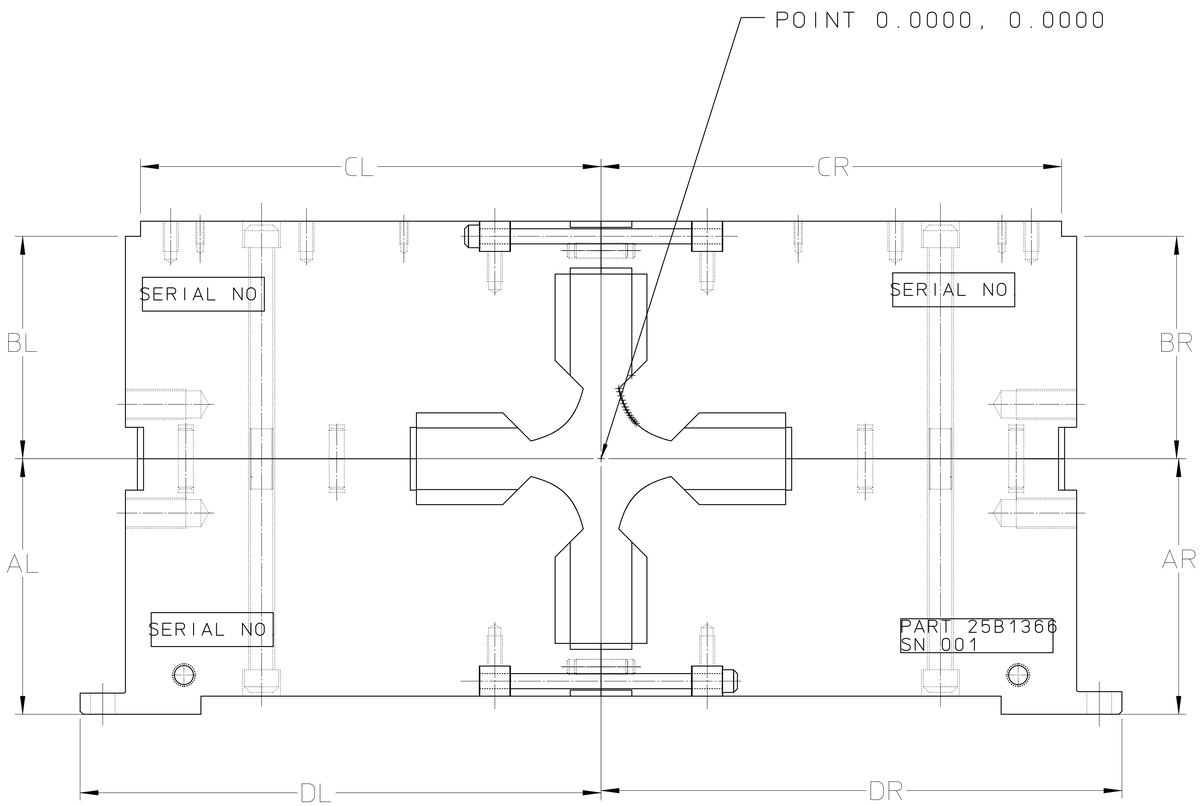

25B1036

* : MEASUREMENT TAKEN WITH MICROMETER AFTER GRINDING PRIOR TO PLATING, ALL OTHER FIGURES GENERATED FROM THE CMM

REQD	ITEM	PART NO.	DESCRIPTION

REV	DWG	CHK	ZONE	DATE	CHANGES

UNLESS OTHERWISE SPECIFIED
TOLERANCES: .X ± FRAC. ±1/64; .XX ± ANGLES ± 1°; .XXX ± FINISH 125√
THREADS ARE CLASS 2
CHAMFER ENDS OF ALL SCREW THREADS 30° CUT 1.5 PITCH THRD RELIEF WITH ROUND NOSE TOOL ON MACHINE CUT THREADS.
BREAK EDGES .016 MAX. ON MACHINED WORK.
REMOVE BURRS WELD SPLATTER & LOOSE SCALE
REFERENCES: ANSI Y14.5 & B46.1

SHOP ORDERS
ACCT. NO. | SERIAL NO.
DATE ISSD. | DATE REQD. | NO. REQD.
DELIVER TO
SURFACE TREATMENT: DEGREASE
IDENT. METH.: TAG
DWG. BY: Y. Minamihara | DATE: 9-30-00
CHK. BY | DATE

LAWRENCE BERKELEY LABORATORY
UNIVERSITY OF CALIFORNIA-BERKELEY
SNS - FE MEBT
MECHANICAL BEAM TRANSPORT - QUADS
CMM INSPECTION DATA

PATENT CLEAR | DWG. TYPE: DATA | SHOWN ON | SCALE: FULL | DO NOT SCALE PRINTS
MICROFILMED | DESIGN ACCT. NO.: 8212-GB | CATEGORY CODE: FE3212 | DWG. NO.: 25B1036 | SIZE | REV.

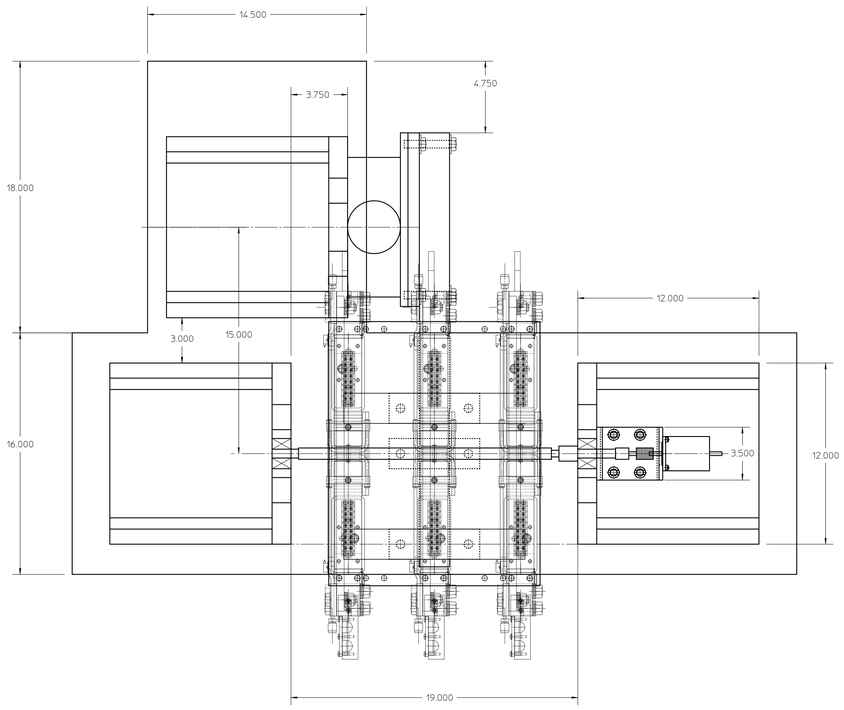

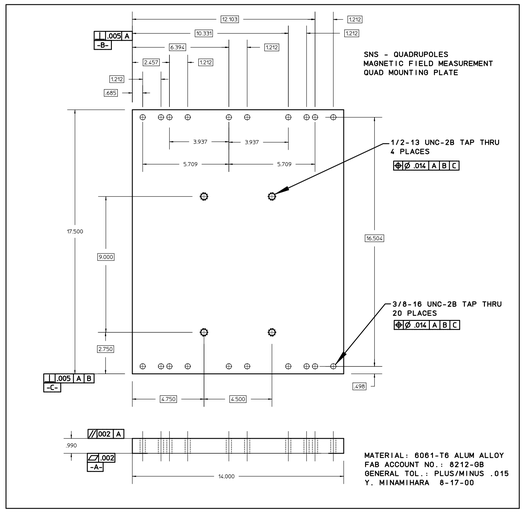

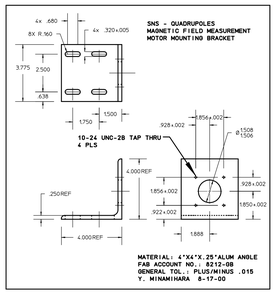

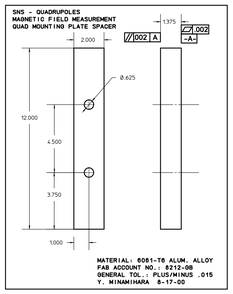

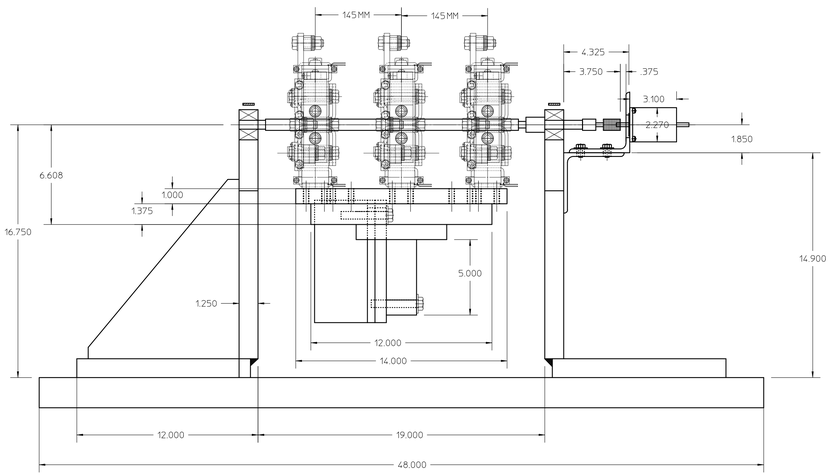

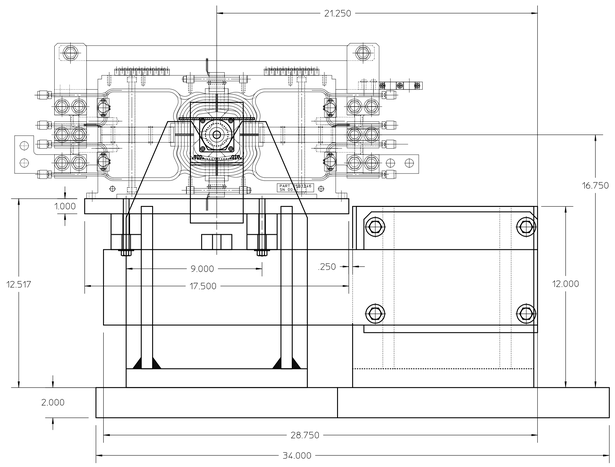

25B1046

NOTES: 1. ALL DIMENSIONS ARE IN INCHES, UNLESS OTHERWISE NOTED.

REV	DWG	CHK	ZONE	DATE	CHANGES

REQD	ITEM	PART NO.	DESCRIPTION

UNLESS OTHERWISE SPECIFIED
TOLERANCES: .X ± – FRAC. ± 1/64; .XX ± – ANGLES ± 1°; .XXX ± – FINISH 125√
THREADS ARE CLASS 2
CHAMFER ENDS OF ALL SCREW THREADS 30°
CUT 1.5 PITCH THRD RELIEF WITH ROUND NOSE TOOL ON MACHINE CUT THREADS.
BREAK EDGES .016 MAX. ON MACHINED WORK
REMOVE BURRS WELD SPLATTER & LOOSE SCALE
REFERENCES: ANSI Y14.5 & B46.1

SHOP ORDERS
ACCT. NO. | SERIAL NO.
DATE ISSD | DATE REQD | NO. REQD
DELIVER TO
SURFACE TREATMENT
IDENT. METH.
DWG BY: Y. MINAMIHARA DATE: 11-14-00
CHK. BY: DATE

LAWRENCE BERKELEY LABORATORY
UNIVERSITY OF CALIFORNIA-BERKELEY

SNS - FE MEBT
QUADRUPOLE MAGNET
QUAD MEASUREMENT FIXTURE LAYOUT

PATENT CLEAR	DWG. TYPE	SHOWN ON	SCALE	DO NOT SCALE PRINTS
	L0		1/4	
MICROFILMED	DESIGN ACCT. NO.	CATEGORY CODE	DWG. NO.	SIZE / REV
		FE3312	25B1046	

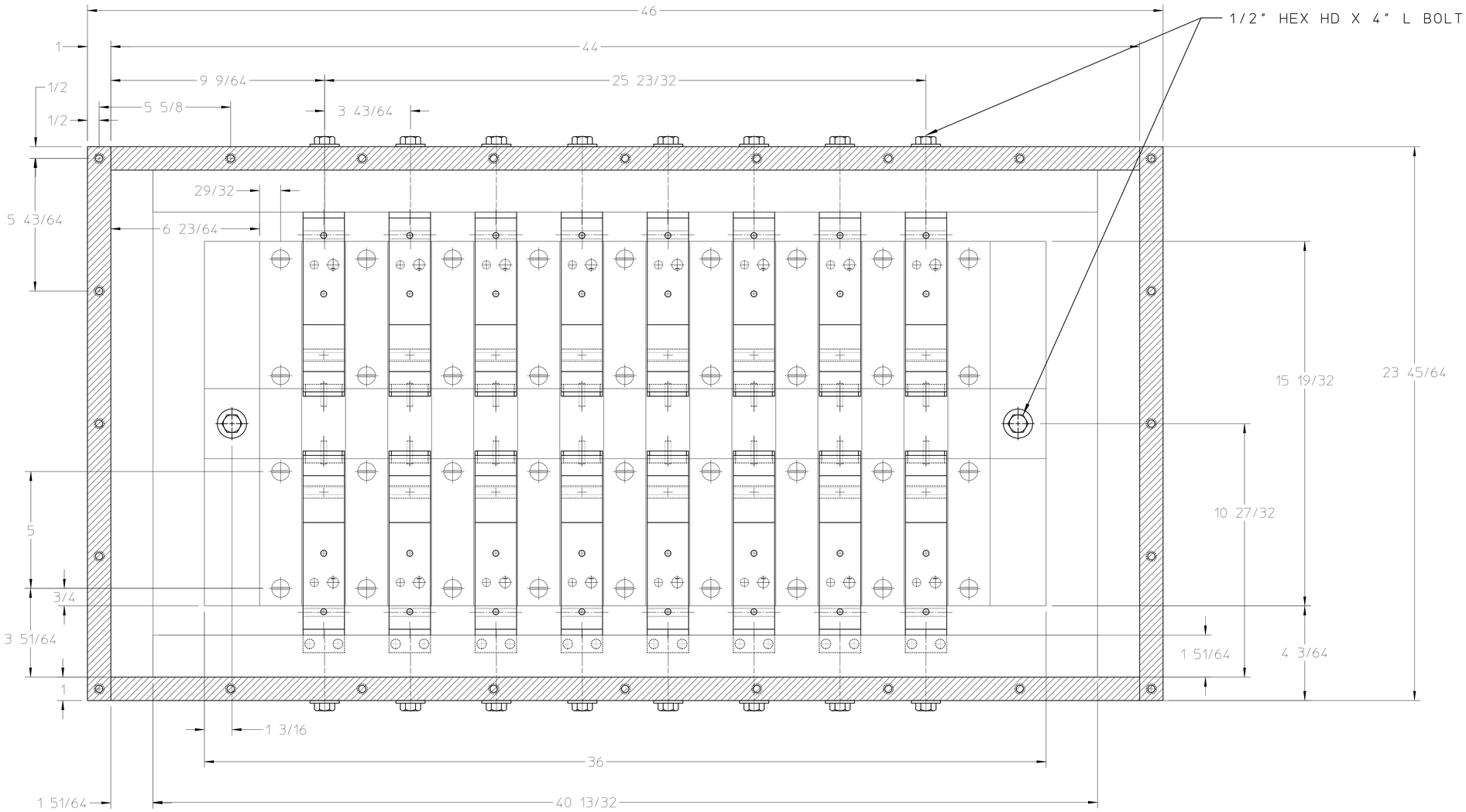

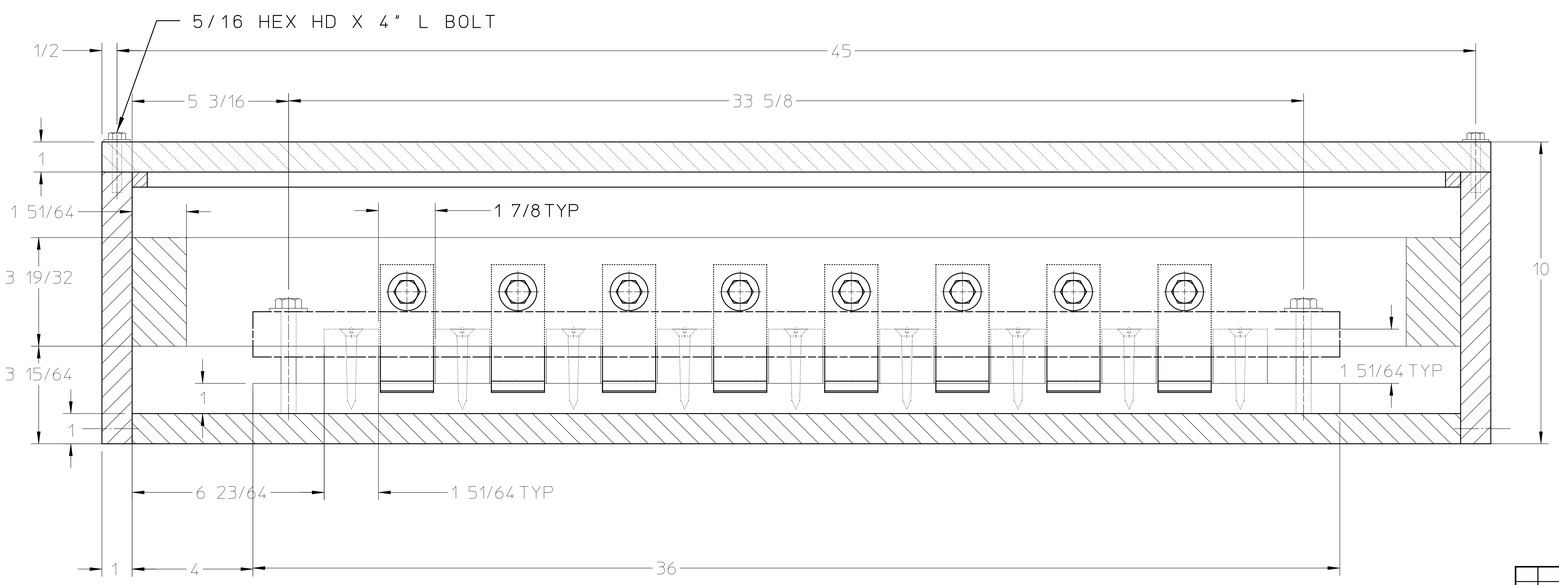

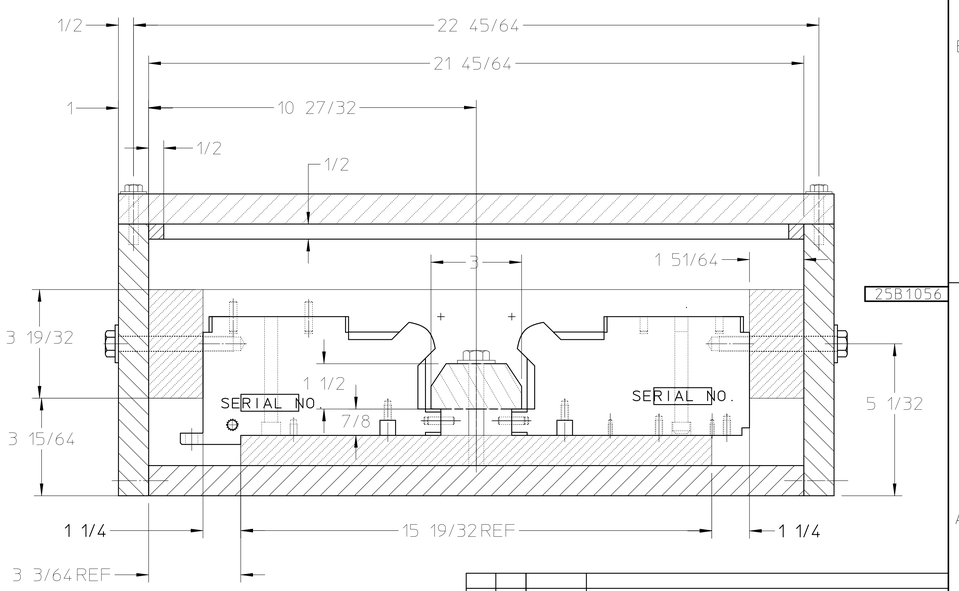

25B1056

REV	DWG	CHK	ZONE	DATE	CHANGES

REQD	ITEM	PART NO.	DESCRIPTION

UNLESS OTHERWISE SPECIFIED
TOLERANCES: .X ± .1 FRAC. ± 1/64; .XX ± .01 ANGLES ± 1°; .XXX ± .001 FINISH 125√
THREADS ARE CLASS 2
CHAMFER ENDS OF ALL SCREW THREADS 30° CUT 1.5 PITCH THRD RELIEF WITH ROUND NOSE TOOL ON MACHINE CUT THREADS.
BREAK EDGES .016 MAX. ON MACHINED WORK
REMOVE BURRS WELD SPLATTER & LOOSE SCALE
REFERENCES: ANSI Y14.5 & B46.1

SHOP ORDERS
ACCT. NO. | SERIAL NO.
DATE ISSD. | DATE REQD. | NO. REQD.
DELIVER TO
SURFACE TREATMENT
IDENT. METH.
DWG BY Y. MINAMIHARA DATE 11-14-00
CHK. BY DATE

LAWRENCE BERKELEY LABORATORY
UNIVERSITY OF CALIFORNIA-BERKELEY

SNS - FE MEBT
QUADRUPOLE MAGNET
PLATING SHIPMENT BOX

PATENT CLEAR	DWG. TYPE	SHOWN ON	SCALE HALF	DO NOT SCALE PRINTS
MICROFILMED	DESIGN ACCT. NO.	CATEGORY CODE FE3312	DWG. NO. 25B1056	SIZE / REV

REQ	ITEM	PART NUMBER	DESCRIPTION
1	1	25B1484	UPPER LEFT COIL ASSEMBLY
1	2	25B1494	UPPER RIGHT COIL ASSEMBLY
1	3	25B1504	LOWER LEFT COIL ASSEMBLY
1	4	25B1514	LOWER RIGHT COIL ASSEMBLY

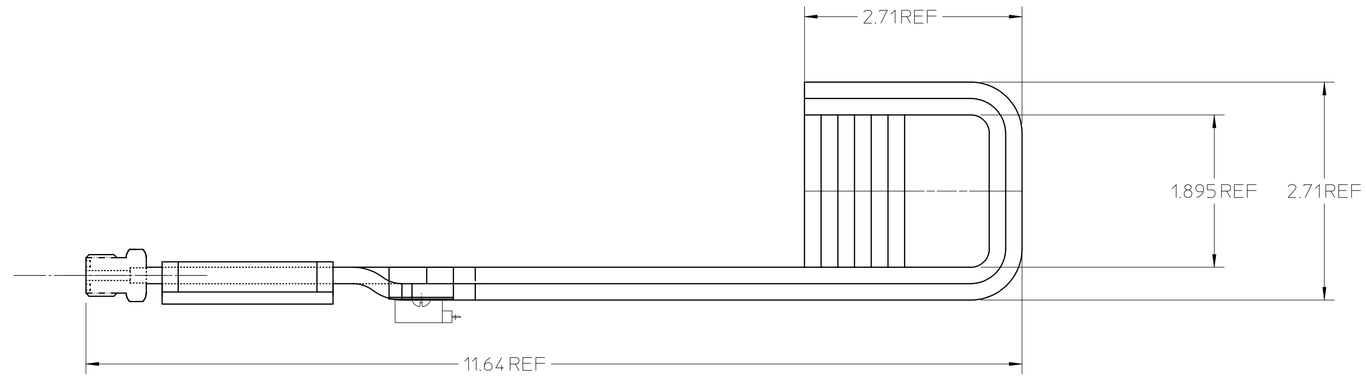

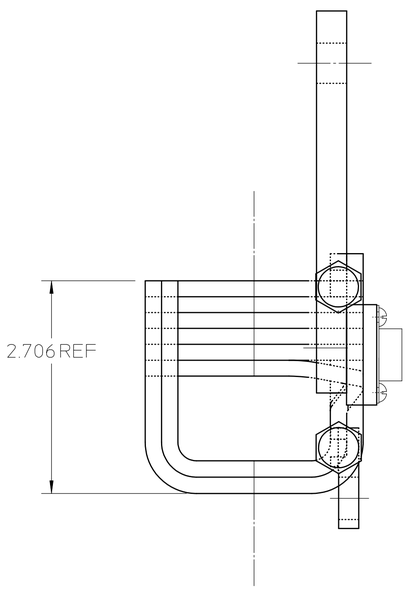

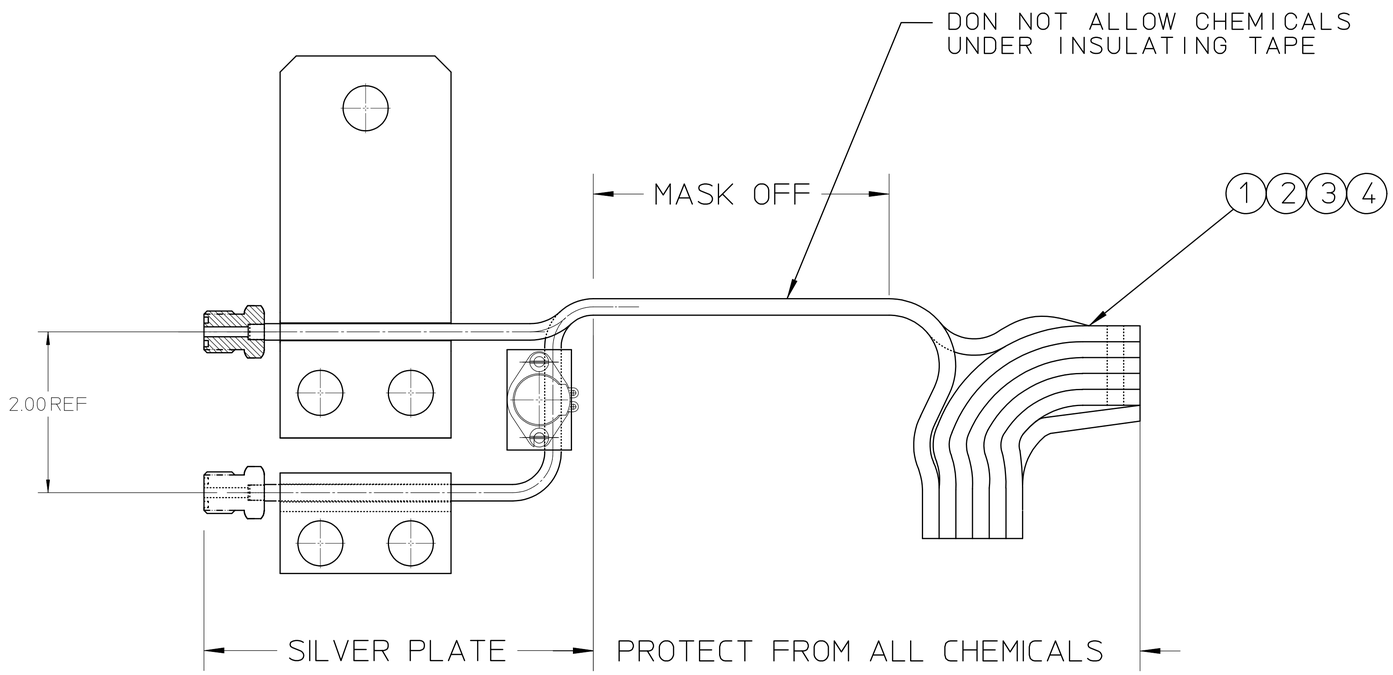

25B1064

NOTES:
1. ALL DIMENSIONS ARE IN INCHES.
2. SILVER PLATE 0.0003/0.0005 INCHES.
3. HANDLE WITH CARE. DO NOT BEND CONDUCTOR. COIL LEADS ARE VERY SOFT FROM BRAZING.
4. PLUG WATER PASSAGES DURING PLATING PROCESS. FLUSH AFTER PLATING.
5. MAKE SURE FEMALE FITTING WILL FASTEN ON AFTER PLATING.
6. WRAP AND PROTECT PART AFTER PLATING.

REV	DWG	CHK	ZONE	DATE	CHANGES

UNLESS OTHERWISE SPECIFIED
TOLERANCES: .X ± – ; .XX ± .02 ; .XXX ± .005 ; FRAC. ± 1/64 ; ANGLES ± 1° ; FINISH 125√
THREADS ARE CLASS 2.
CHAMFER ENDS OF ALL SCREW THREADS 30° CUT 1.5 PITCH THRD RELIEF WITH ROUND NOSE TOOL ON MACHINE CUT THREADS.
BREAK EDGES .016 MAX. ON MACHINED WORK
REMOVE BURRS WELD SPLATTER & LOOSE SCALE
REFERENCES: ANSI Y14.5 & B46.1.

SHOP ORDERS
ACCT. NO. | SERIAL NO.
DATE ISSD. | DATE REQD. | NO. REQD.
DELIVER TO
SURFACE TREATMENT: DEGREASE
IDENT. METH.: TAG
DWG. BY: Y. MINAMIHARA | DATE: 11-14-00
CHK. BY | DATE

LAWRENCE BERKELEY LABORATORY
UNIVERSITY OF CALIFORNIA-BERKELEY

SNS - FES MEBT
MECHANICAL BEAM TRANSPORT SYSTEMS - QUADS
PLATING - TYPICAL FOR COIL ASSEMBLY

PATENT CLEAR | DWG. TYPE: DETAIL | SHOWN ON | SCALE: FULL | DO NOT SCALE PRINTS
MICROFILMED | DESIGN ACCT. NO. | CATEGORY CODE: FE3312 | DWG. NO.: 25B1064 | SIZE | REV.

REQ	ITEM	PART NUMBER	DESCRIPTION
			OFE COPPER, .375 THICK PLATE

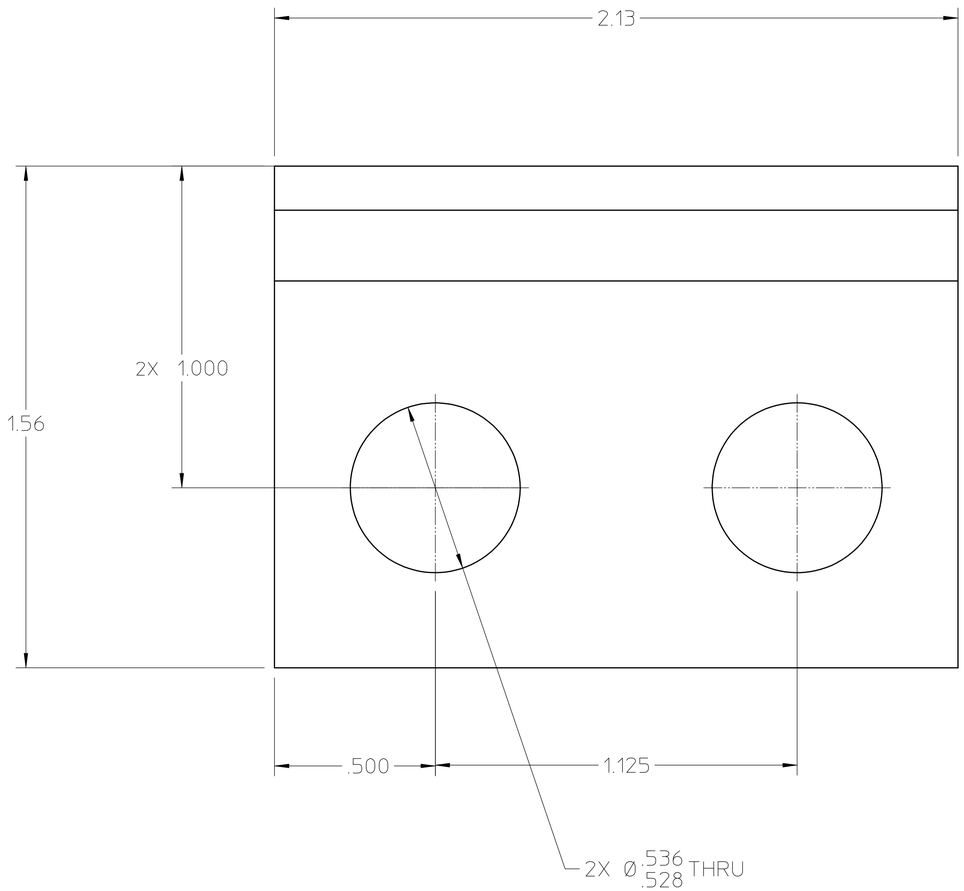

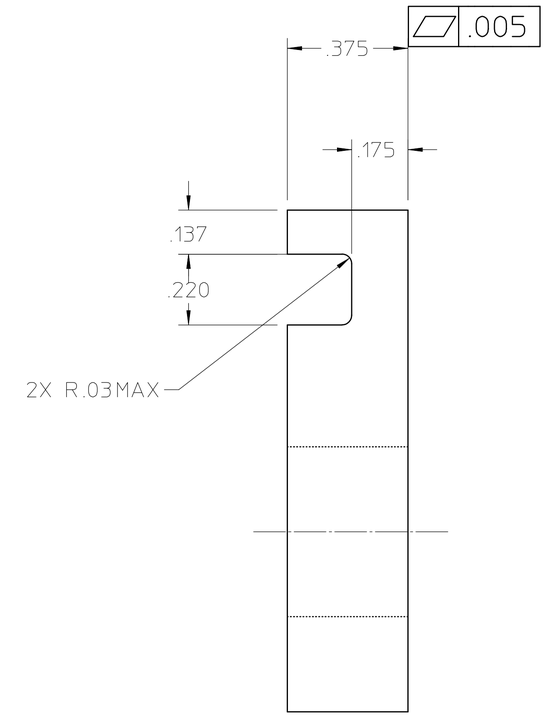

25B1224

NOTES: 1. ALL DIMENSIONS ARE IN INCHES.

REV	DWG	CHK	ZONE	DATE	CHANGES

UNLESS OTHERWISE SPECIFIED

TOLERANCES		
	.X ± –	FRAC. ±1/64
	.XX ± .02	ANGLES ±1°
	.XXX ± .010	FINISH 125√

THREADS ARE CLASS 2.
CHAMFER ENDS OF ALL SCREW THREADS 30°.
CUT 1.5 PITCH THRD RELIEF WITH ROUND NOSE TOOL ON MACHINE CUT THREADS.
BREAK EDGES .016 MAX. ON MACHINED WORK
REMOVE BURRS WELD SPLATTER & LOOSE SCALE
REFERENCES: ANSI Y14.5 & B46.1.

SHOP ORDERS

ACCT. NO.		SERIAL NO.
DATE ISSD	DATE REQD.	NO. REQD.
DELIVER TO		
SURFACE TREATMENT	DEGREASE	
IDENT. METH.	TAG	
DWG. BY	Y. MINAMIHARA	DATE 12-15-99
CHK. BY		DATE

LAWRENCE BERKELEY LABORATORY
UNIVERSITY OF CALIFORNIA-BERKELEY

SNS - FES MEBT

MECHANICAL BEAM TRANSPORT SYSTEMS - QUADS

NARROW LOWER FLAG

PATENT CLEAR	DWG. TYPE	SHOWN ON	SCALE 4X	DO NOT SCALE PRINTS
	DETAIL			
MICROFILMED	DESIGN ACCT. NO.	CATEGORY CODE FE3312	DWG. NO. 25B1204	SIZE / REV.

REQ	ITEM	PART NUMBER	DESCRIPTION
			OFE COPPER, .375 THICK PLATE

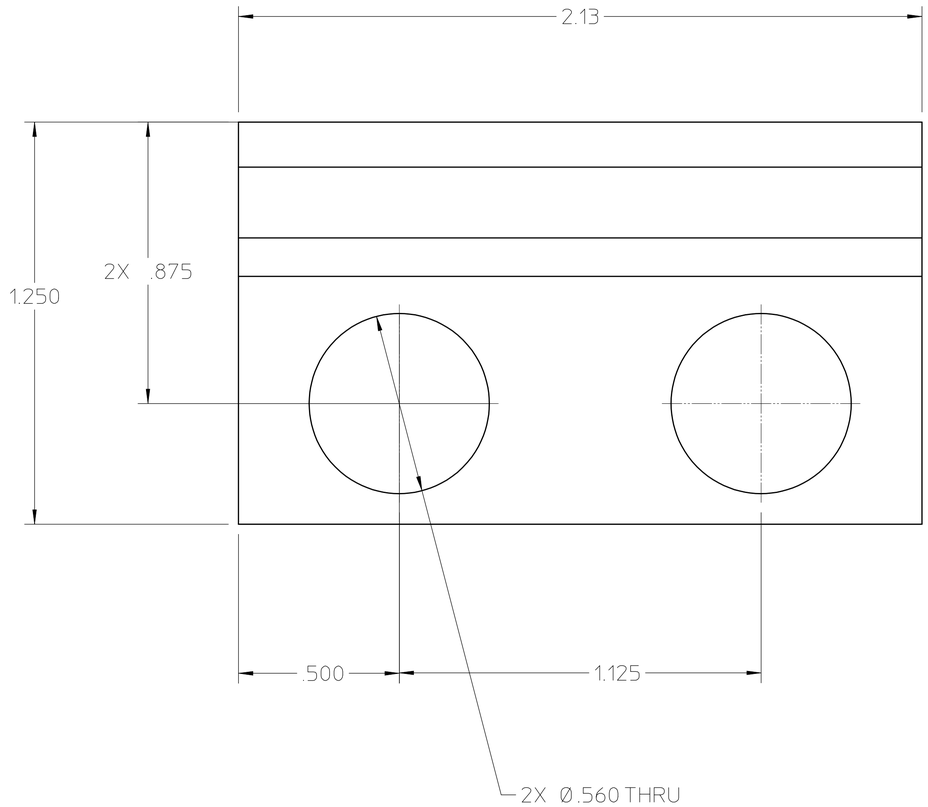

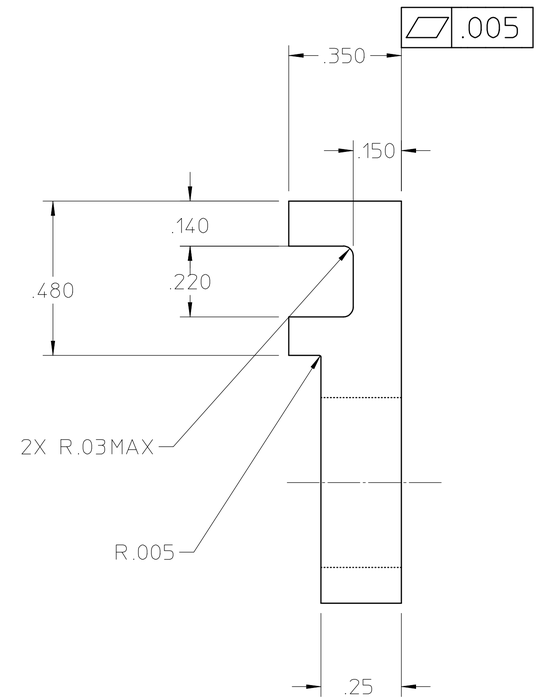

25B1224A

NOTES: 1. ALL DIMENSIONS ARE IN INCHES.

REV	DWG	CHK	ZONE	DATE	CHANGES
A	YM			11-17-00	REMOVED NOTE 2 TO GOLD FLASH PART

UNLESS OTHERWISE SPECIFIED

TOLERANCES: .X ± – ; FRAC. ± 1/64 ; .XX ± .02 ; ANGLES ± 1° ; .XXX ± .005 ; FINISH 125√

THREADS ARE CLASS 2
CHAMFER ENDS OF ALL SCREW THREADS 30°.
CUT 1.5 PITCH THRD RELIEF WITH ROUND NOSE TOOL ON MACHINE CUT THREADS.
BREAK EDGES .016 MAX. ON MACHINED WORK
REMOVE BURRS WELD SPLATTER & LOOSE SCALE
REFERENCES: ANSI Y14.5 & B46.1.

SHOP ORDERS

ACCT. NO. | SERIAL NO. | DATE ISSD. | DATE REQD. | NO. REQD.
DELIVER TO
SURFACE TREATMENT: DEGREASE
IDENT. METH.: TAG
DWG. BY: Y. MINAMIHARA | DATE: 12-15-99
CHK. BY | DATE

LAWRENCE BERKELEY LABORATORY
UNIVERSITY OF CALIFORNIA-BERKELEY

SNS - FES MEBT

MECHANICAL BEAM TRANSPORT SYSTEMS - QUADS

CENTER OVERLAPPING FLAG

PATENT CLEAR	DWG. TYPE	SHOWN ON	SCALE	DO NOT SCALE PRINTS
	DETAIL		4X	
MICROFILMED	DESIGN ACCT. NO.	CATEGORY CODE	DWG. NO.	SIZE / REV.
		FE3312	25B1224	A

REQ	ITEM	PART NUMBER	DESCRIPTION
			LOW CARBON STEEL C1006

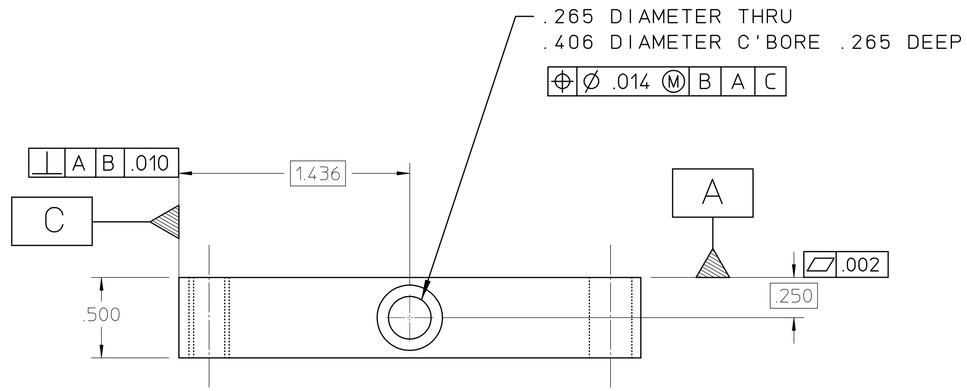

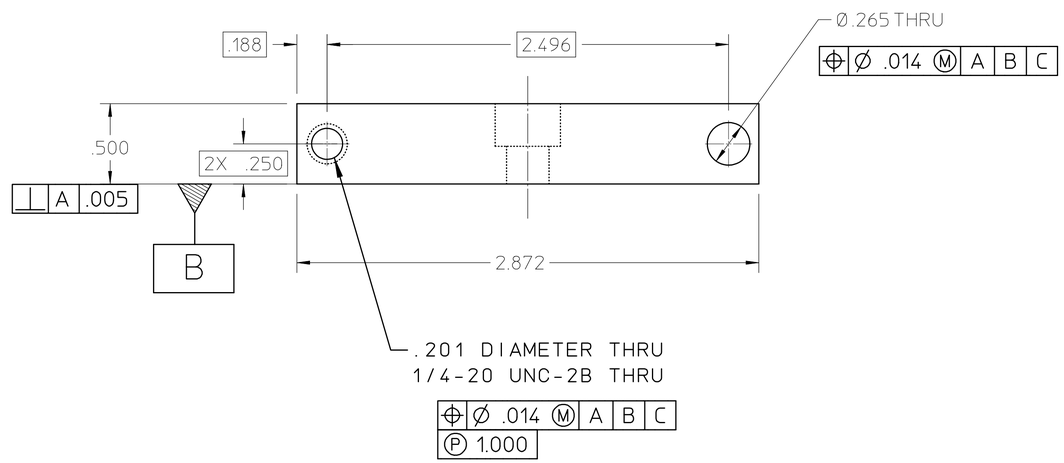

25B1234

NOTES: 1. ALL DIMENSIONS ARE IN INCHES.

REV	DWG	CHK	ZONE	DATE	CHANGES

UNLESS OTHERWISE SPECIFIED

TOLERANCES	
.X ± -	FRAC. ± 1/64
.XX ± .02	ANGLES ± 1°
.XXX ± .005	FINISH 125√

THREADS ARE CLASS 2
CHAMFER ENDS OF ALL SCREW THREADS 30°.
CUT 1.5 PITCH THRD RELIEF WITH ROUND NOSE TOOL ON MACHINE CUT THREADS.
BREAK EDGES .016 MAX. ON MACHINED WORK
REMOVE BURRS WELD SPLATTER & LOOSE SCALE
REFERENCES: ANSI Y14.5 & B46.1.

SHOP ORDERS

ACCT. NO.		SERIAL NO.	
DATE ISSD.	DATE REQD.	NO. REQD.	
DELIVER TO			
SURFACE TREATMENT	DEGREASE		
IDENT. METH.	TAG		
DWG. BY	Y. MINAMIHARA	DATE	12-15-99
CHK. BY		DATE	

LAWRENCE BERKELEY LABORATORY
UNIVERSITY OF CALIFORNIA-BERKELEY

SNS - FES MEBT

MECHANICAL BEAM TRANSPORT SYSTEMS - QUADS

CROSSBAR

PATENT CLEAR	DWG. TYPE	SHOWN ON	SCALE	DO NOT SCALE PRINTS
	DETAIL		2X	
MICROFILMED	DESIGN ACCT. NO.	CATEGORY CODE	DWG. NO.	SIZE / REV.
		FE3312	25B1234	

REQ	ITEM	PART NUMBER	DESCRIPTION
			ALS 1/8" BRASS FITTING

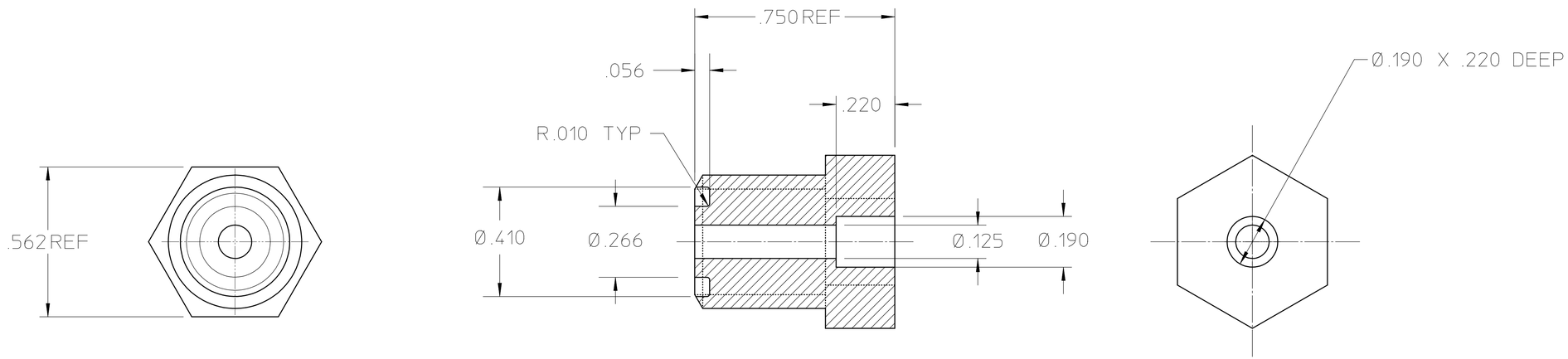

25B1244A

NOTES: 1. ALL DIMENSIONS ARE IN INCHES.

REV	DWG	CHK	ZONE	DATE	CHANGES
A	YM			11-17-00	REPLACED SWAGELOK FITTING

UNLESS OTHERWISE SPECIFIED

TOLERANCES		
	.X ± -	FRAC. ±1/64
	.XX ± .02	ANGLES ±1°
	.XXX ± .005	FINISH 125

THREADS ARE CLASS 2.
CHAMFER ENDS OF ALL SCREW THREADS 30°.
CUT 1.5 PITCH THRD RELIEF WITH ROUND NOSE TOOL ON MACHINE CUT THREADS.
BREAK EDGES .016 MAX. ON MACHINED WORK
REMOVE BURRS WELD SPLATTER & LOOSE SCALE
REFERENCES: ANSI Y14.5 & B46.1.

SHOP ORDERS

ACCT. NO.		SERIAL NO.
DATE ISSD	DATE REQD.	NO. REQD.
DELIVER TO		
SURFACE TREATMENT	DEGREASE	
IDENT. METH.	TAG	
DWG. BY	Y. MINAMIHARA	DATE 12-15-99
CHK. BY		DATE

LAWRENCE BERKELEY LABORATORY
UNIVERSITY OF CALIFORNIA-BERKELEY

SNS - FES MEBT

MECHANICAL BEAM TRANSPORT SYSTEMS - QUADS

FITTING MODIFIED

PATENT CLEAR	DWG. TYPE	SHOWN ON	SCALE 4X	DO NOT SCALE PRINTS
	DETAIL			
MICROFILMED	DESIGN ACCT. NO.	CATEGORY CODE FE3312	DWG. NO. 25B1244	SIZE / REV. A

REQ	ITEM	PART NUMBER	DESCRIPTION
			DELRIN

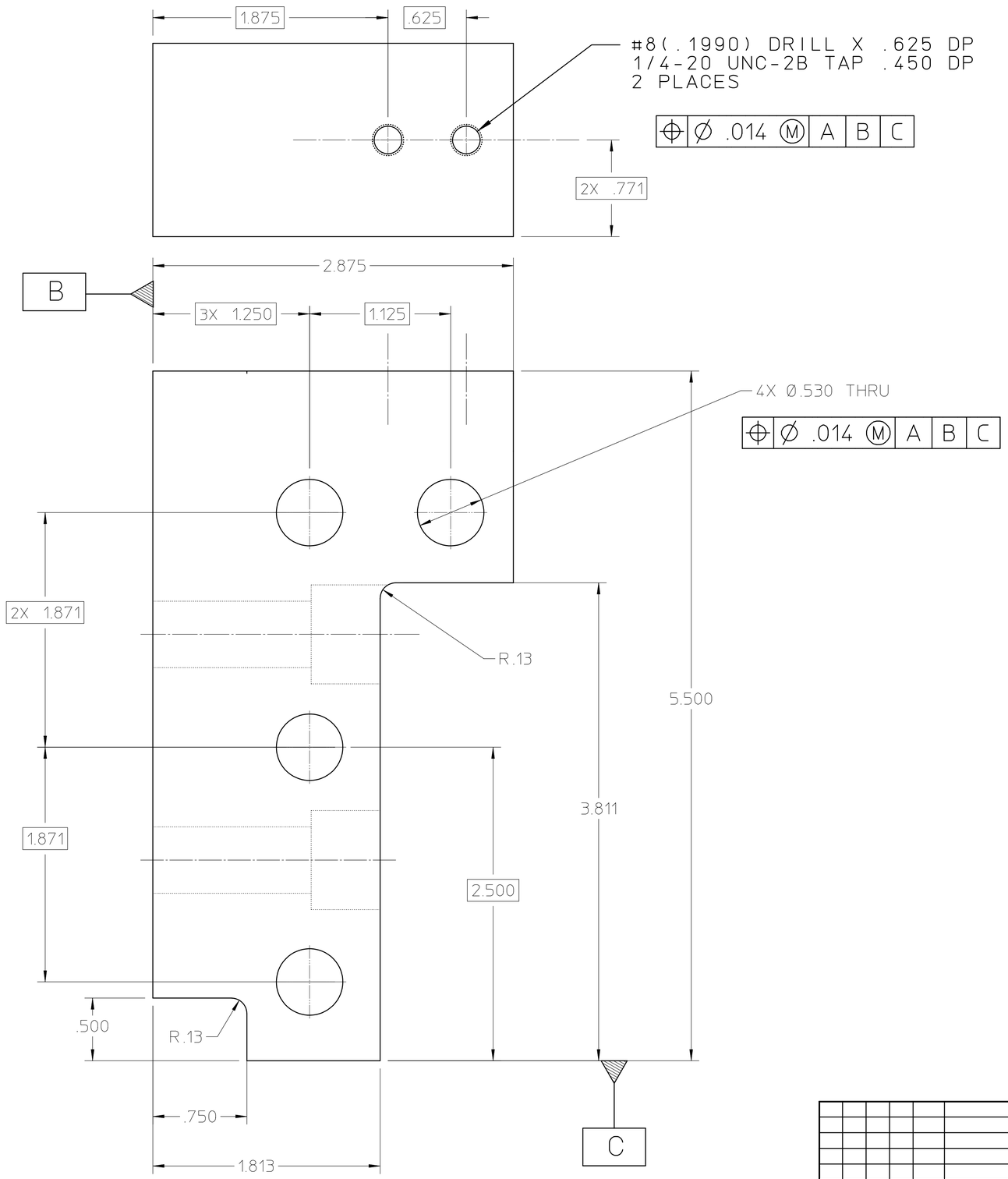

NOTES: 1. ALL DIMENSIONS ARE IN INCHES.

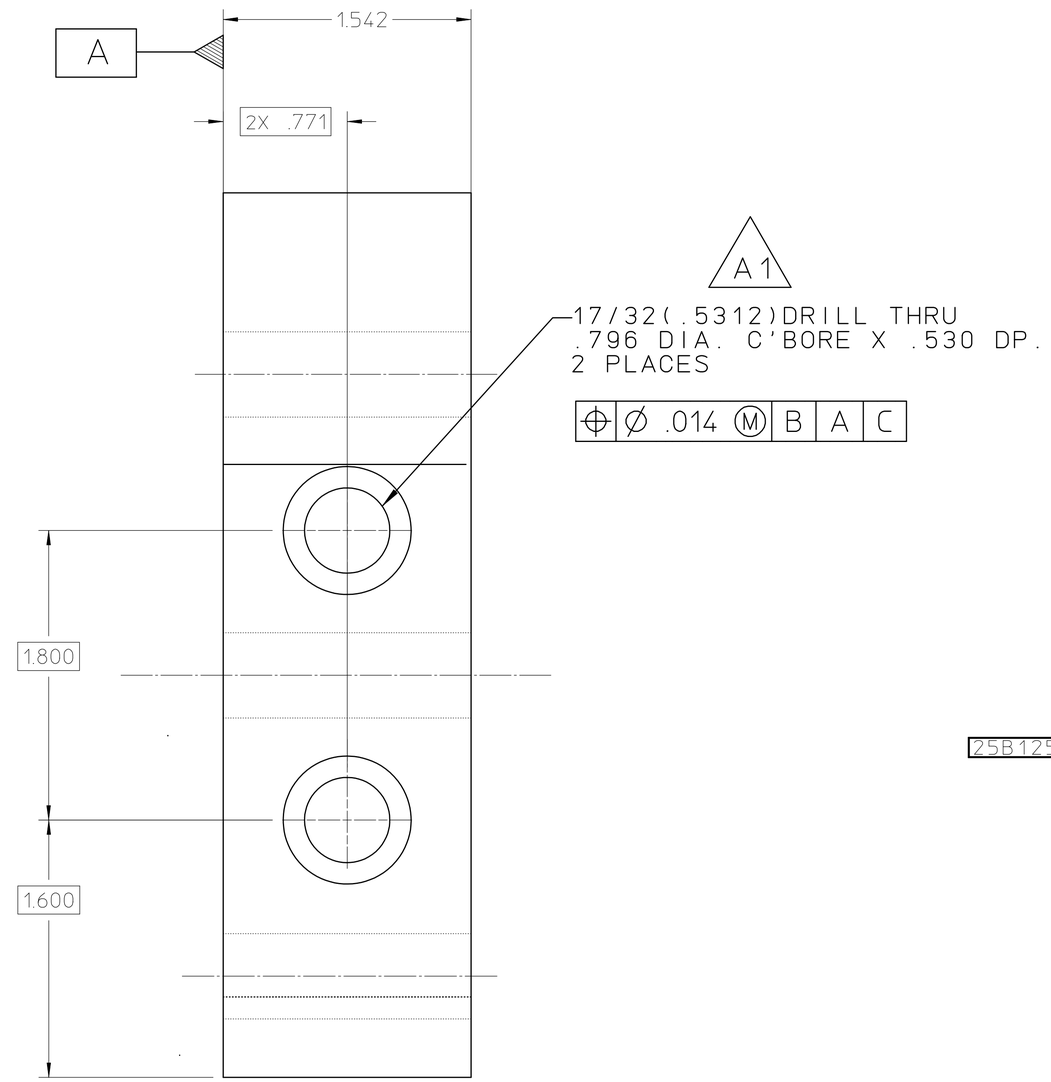

25B1254A

REV	DWG	CHK	ZONE	DATE	
A1	YM		ZONE	6-30-00	WAS .596 DIA. C'BORE
REV	DWG	CHK	ZONE	DATE	CHANGES

UNLESS OTHERWISE SPECIFIED
TOLERANCES: .X ± FRAC. ±1/64; .XX ± .03 ANGLES ±1°; .XXX ± .015 FINISH 125√
THREADS ARE CLASS 2.
CHAMFER ENDS OF ALL SCREW THREADS 30°.
CUT 1.5 PITCH THRD RELIEF WITH ROUND NOSE TOOL ON MACHINE CUT THREADS.
BREAK EDGES .016 MAX. ON MACHINED WORK
REMOVE BURRS WELD SPLATTER & LOOSE SCALE
REFERENCES: ANSI Y14.5 & B46.1.

SHOP ORDERS
ACCT. NO. | SERIAL NO.
DATE ISSD. | DATE REQD. | NO. REQD.
DELIVER TO
SURFACE TREATMENT: DEGREASE
IDENT. METH.: TAG
DWG. BY: Y. MINAMIHARA | DATE: 12-15-99
CHK. BY | DATE

LAWRENCE BERKELEY LABORATORY
UNIVERSITY OF CALIFORNIA-BERKELEY
SNS - FES MEBT
MECHANICAL BEAM TRANSPORT SYSTEMS - QUADS
INSULATOR BLOCK

PATENT CLEAR	DWG. TYPE	SHOWN ON	SCALE	DO NOT SCALE PRINTS
	DETAIL		2X	
MICROFILMED	DESIGN ACCT. NO.	CATEGORY CODE	DWG. NO.	SIZE / REV.
		FE3312	25B1254	A

REQ	ITEM	PART NUMBER	DESCRIPTION
			LOW CARBON STEEL C1006

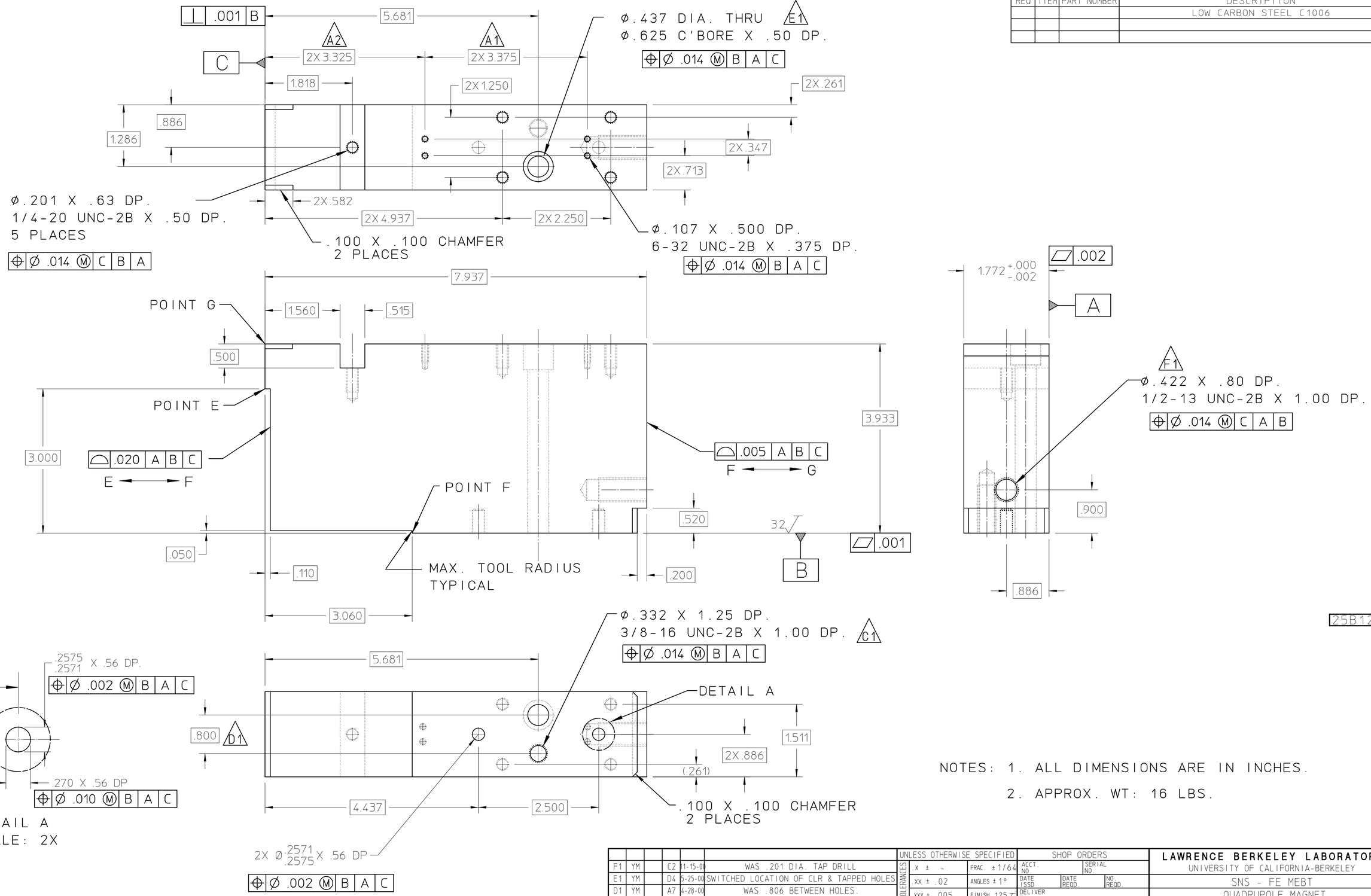

NOTES: 1. ALL DIMENSIONS ARE IN INCHES.

2. APPROX. WT: 16 LBS.

REV	DWG	CHK	ZONE	DATE	CHANGES
F1	YM		C2	11-15-00	WAS .201 DIA. TAP DRILL
E1	YM		D4	5-25-00	SWITCHED LOCATION OF CLR & TAPPED HOLES
D1	YM		A7	4-28-00	WAS .806 BETWEEN HOLES.
C1	YM		B5	3-16-00	WAS 3/8-24 UNF-2B THREAD.
B	YM		D6	3-2-00	CHANGED CHAMFERS AND POLE PROFILE
A2	YM		D6	2-7-00	WAS 3.280
A1	YM		D5	2-7-00	WAS 3.420

UNLESS OTHERWISE SPECIFIED

TOLERANCES: .X ± – ; FRAC. ±1/64 ; .XX ± .02 ; ANGLES ±1° ; .XXX ± .005 ; FINISH 125√

THREADS ARE CLASS 2
CHAMFER ENDS OF ALL SCREW THREADS 30°
CUT 1.5 PITCH THRD RELIEF WITH ROUND NOSE TOOL ON MACHINE CUT THREADS.
BREAK EDGES .016 MAX. ON MACHINED WORK
REMOVE BURRS WELD SPLATTER & LOOSE SCALE
REFERENCES: ANSI Y14.5 & B46.1.

SHOP ORDERS

ACCT. NO. | SERIAL NO | DATE ISSD | DATE REQD. | NO. REQD.
DELIVER TO
SURFACE TREATMENT: DEGREASE
IDENT. METH.: TAG
DWG. BY: Y. MINAMIHARA | DATE: 12-15-99
CHK. BY | DATE

LAWRENCE BERKELEY LABORATORY
UNIVERSITY OF CALIFORNIA-BERKELEY

SNS - FE MEBT
QUADRUPOLE MAGNET
POLE PIECE - TOP

PATENT CLEAR	DWG. TYPE	SHOWN ON	SCALE	DO NOT SCALE PRINTS
	DETAIL		FULL	
MICROFILMED	DESIGN ACCT. NO.	CATEGORY CODE	DWG. NO.	SIZE / REV.
		FE3312	25B1264	F

REQ	ITEM	PART NUMBER	DESCRIPTION
			LOW CARBON STEEL C1006

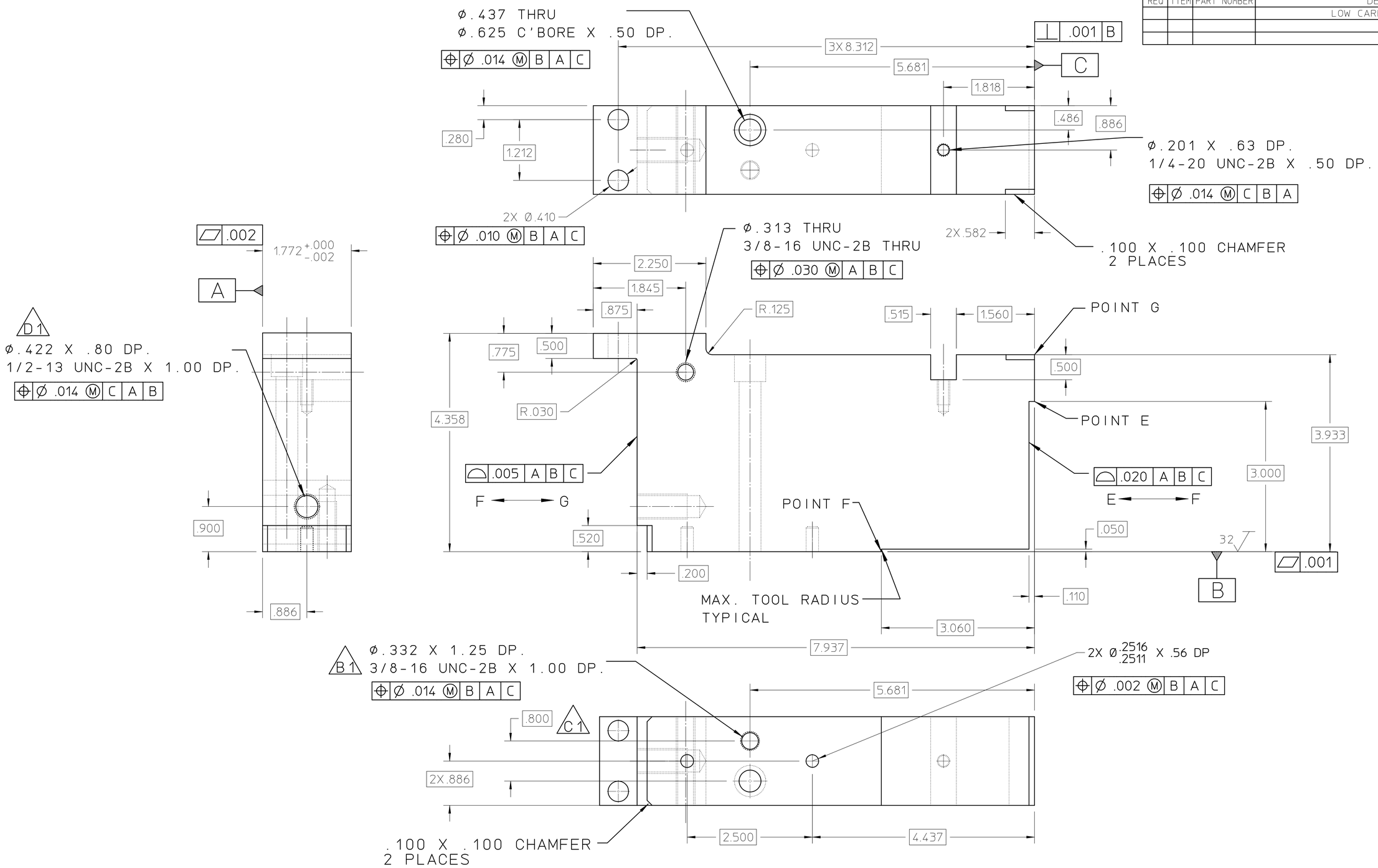

25B1274D

NOTES: 1. ALL DIMENSIONS ARE IN INCHES.

2. APPROX. WT: 16 LBS.

REV	DWG	CHK	ZONE	DATE	CHANGES
D1	YM		C8	11-15-00	WAS .201 DIA. TAP DRILL
C1	YM		A6	4-28-00	WAS .806 BETWEEN HOLES.
B1	YM		B6	3-16-00	WAS 3/8-24 UNF-2B THREAD.
A	YM			3-2-00	CHANGED CHAMFERS AND POLE PROFILE

UNLESS OTHERWISE SPECIFIED

TOLERANCES: .X ± – ; .XX ± .02 ; .XXX ± .005 ; FRAC. ± 1/64 ; ANGLES ± 1° ; FINISH 125√

THREADS ARE CLASS 2.
CHAMFER ENDS OF ALL SCREW THREADS 30°.
CUT 1.5 PITCH THRD RELIEF WITH ROUND NOSE TOOL ON MACHINE CUT THREADS.
BREAK EDGES .016 MAX. ON MACHINED WORK
REMOVE BURRS WELD SPLATTER & LOOSE SCALE
REFERENCES: ANSI Y14.5 & B46.1.

SHOP ORDERS

ACCT. NO. | SERIAL NO. | DATE ISSD | DATE REQD. | NO. REQD. | DELIVER TO | SURFACE TREATMENT: DEGREASE | IDENT. METH.: TAG | DWG. BY: Y. MINAMIHARA | DATE: 12-15-99 | CHK. BY | DATE

LAWRENCE BERKELEY LABORATORY
UNIVERSITY OF CALIFORNIA-BERKELEY

SNS - FE MEBT

QUADRUPOLE MAGNET

POLE PIECE - BOTTOM

PATENT CLEAR	DWG. TYPE	SHOWN ON	SCALE	DO NOT SCALE PRINTS
	DETAIL		FULL	
MICROFILMED	DESIGN ACT. NO.	CATEGORY CODE	DWG. NO.	SIZE / REV.
		FE3312	25B1274	D

REQ	ITEM	PART NUMBER	DESCRIPTION
AR	1		COPPER MAGNET CONDUCTOR (.1875 SQ W/.125 ID)
			APPROX. LENGTH 180" (SEE NOTE #2)
AR	2		EPOXY AND FIBERGLASS TAPE

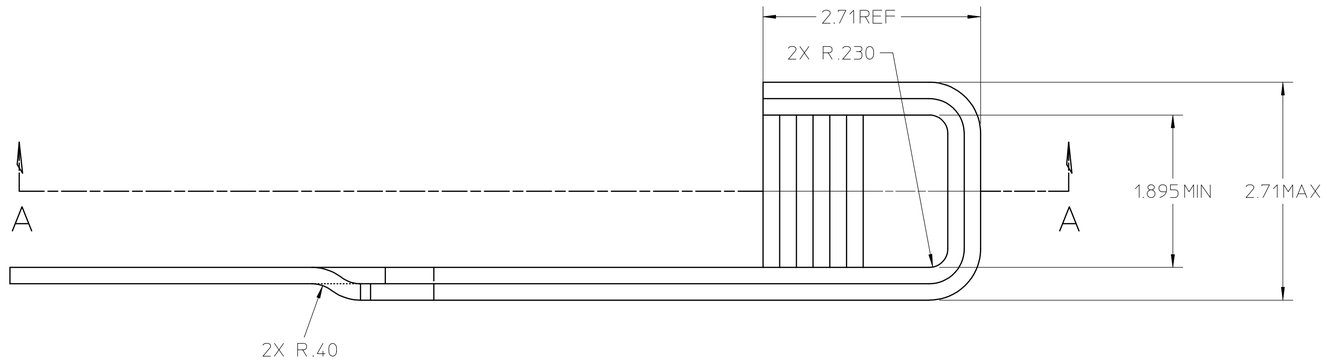

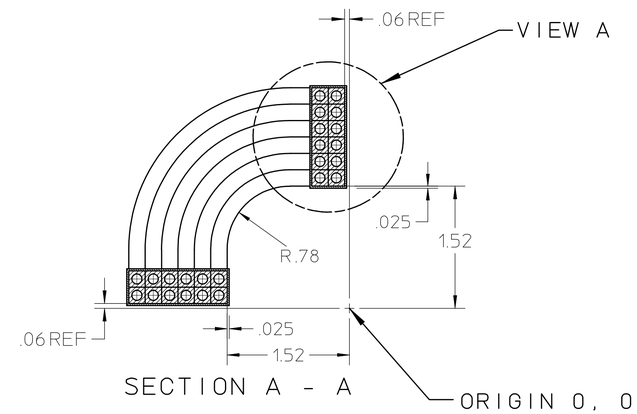

SECTION A - A

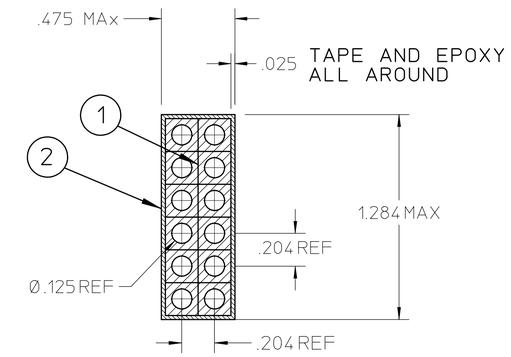

VIEW A
SCALE: 2X

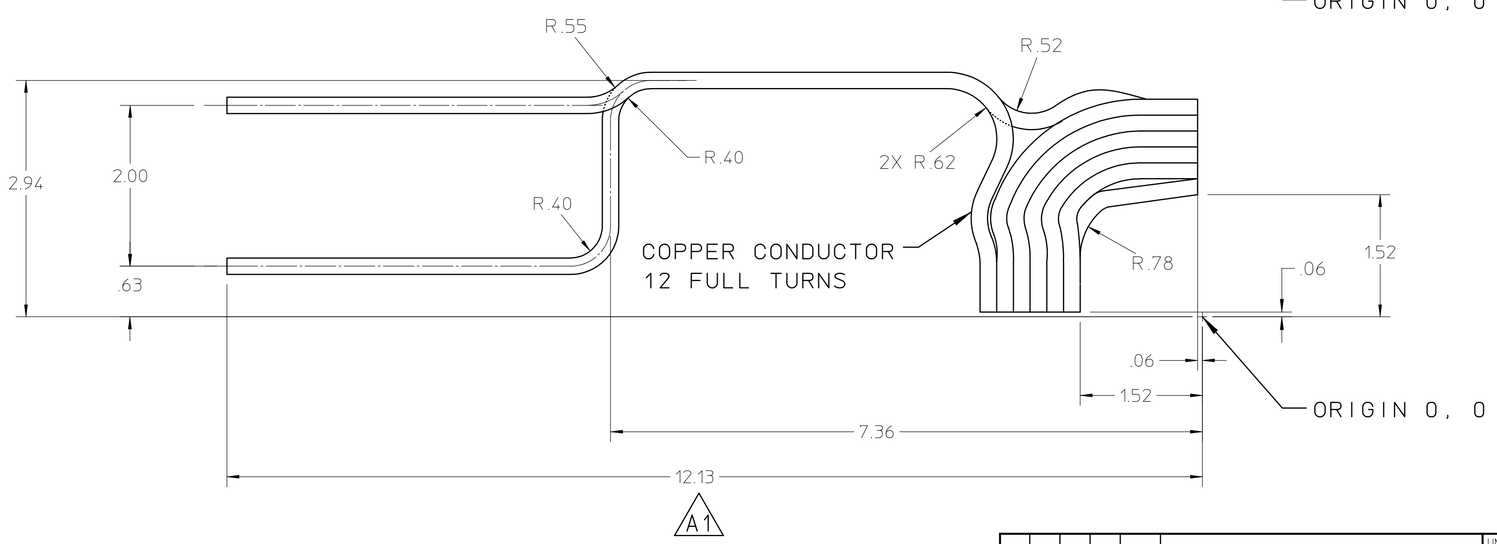

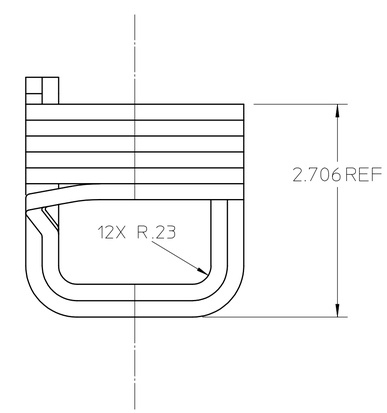

25B1284A

NOTES:
1. ALL DIMENSIONS ARE IN INCHES.
2. COPPER MAGNET CONDUCTOR PER LBNL SPEC: M919.
WITH INSULATION PER LBNL SPEC: M920.

REV	DWG	CHK	ZONE	DATE	CHANGES
A1	YM		A6	3-3-00	WAS 11.13 LONG.
A	YM			3-3-00	REMOVED TUBE END DETAIL AND INSULATION NOTES.

UNLESS OTHERWISE SPECIFIED
TOLERANCES: .X ± - ; FRAC. ± 1/64 ; .XX ± .02 ; ANGLES ± 1° ; .XXX ± .005 ; FINISH 125√
THREADS ARE CLASS 2
CHAMFER ENDS OF ALL SCREW THREADS 30°.
CUT 1.5 PITCH THRD RELIEF WITH ROUND NOSE TOOL ON MACHINE CUT THREADS.
BREAK EDGES .016 MAX. ON MACHINED WORK
REMOVE BURRS WELD SPLATTER & LOOSE SCALE
REFERENCES: ANSI Y14.5 & B46.1.

SHOP ORDERS
ACCT. NO. | SERIAL NO.
DATE ISSD. | DATE REQD. | NO. REQD.
DELIVER TO
SURFACE TREATMENT: DEGREASE
IDENT. METH.: TAG
DWG. BY: Y. MINAMIHARA | DATE: 12-15-99
CHK. BY | DATE

LAWRENCE BERKELEY LABORATORY
UNIVERSITY OF CALIFORNIA-BERKELEY
SNS - FES MEBT
MECHANICAL BEAM TRANSPORT SYSTEMS - QUADS
LEFT COIL WINDING

PATENT CLEAR	DWG. TYPE	SHOWN ON	SCALE	DO NOT SCALE PRINTS
	DETAIL		FULL	
MICROFILMED	DESIGN ACCT. NO.	CATEGORY CODE	DWG. NO.	SIZE / REV.
		FE3312	25B1284	A

REQ	ITEM	PART NUMBER	DESCRIPTION
AR	1		COPPER MAGNET CONDUCTOR (.1875 SQ W/.125 ID)
			APPROX. LENGTH 180" (SEE NOTE #2)
AR	2		EPOXY AND FIBERGLASS TAPE

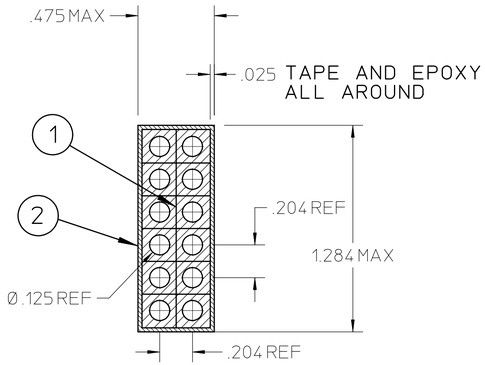

VIEW A
SCALE: 2X

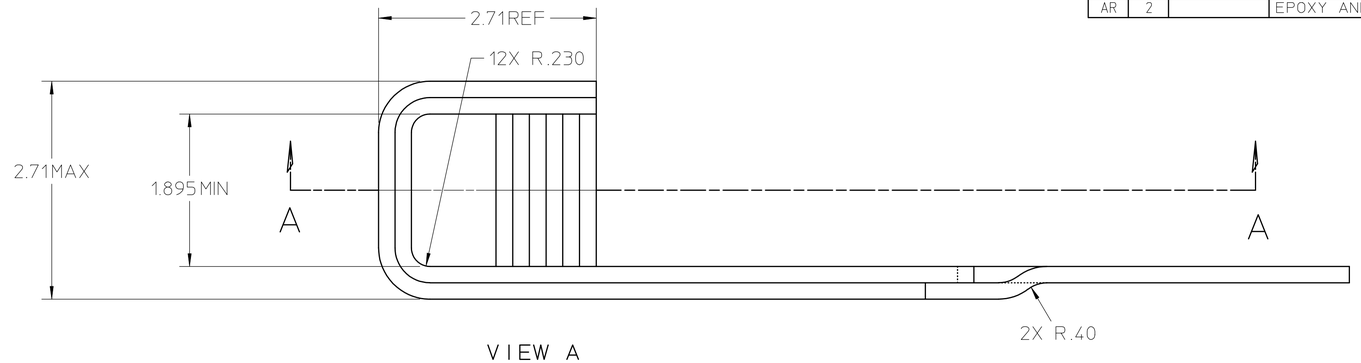

VIEW A

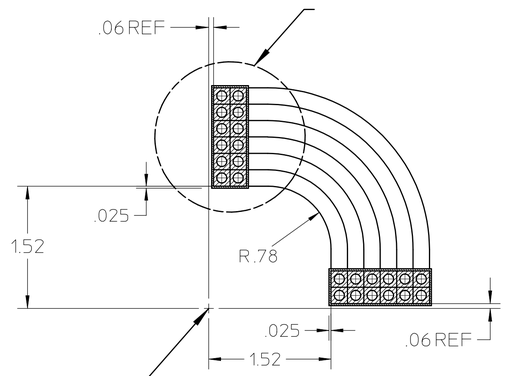

SECTION A - A

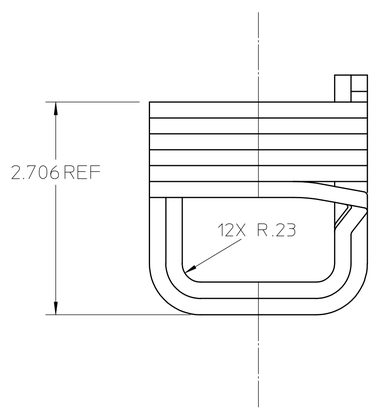

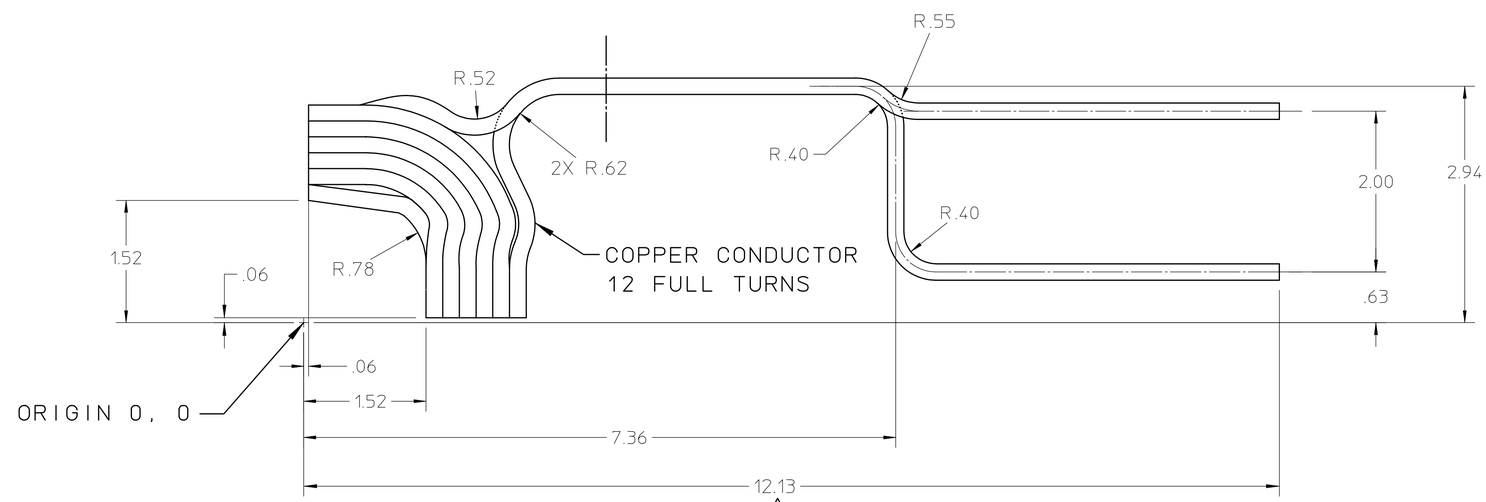

A1

25B1294A

NOTES:
1. ALL DIMENSIONS ARE IN INCHES.
2. COPPER MAGNET CONDUCTOR PER LBNL SPEC: M919. WITH INSULATION PER LBNL SPEC: M920.

REV	DWG	CHK	ZONE	DATE	CHANGES
A1	YM			3-3-00	WAS 11.13 LONG.
A	YM			3-3-00	REMOVED TUBE END DETAIL AND INSULATION NOTES.

UNLESS OTHERWISE SPECIFIED
TOLERANCES: .X ± - ; FRAC. ±1/64 ; .XX ± .02 ; ANGLES ±1° ; .XXX ± .005 ; FINISH 125√
THREADS ARE CLASS 2
CHAMFER ENDS OF ALL SCREW THREADS 30°
CUT 1.5 PITCH THRD RELIEF WITH ROUND NOSE TOOL ON MACHINE CUT THREADS.
BREAK EDGES .016 MAX. ON MACHINED WORK
REMOVE BURRS WELD SPLATTER & LOOSE SCALE
REFERENCES: ANSI Y14.5 & B46.1.

SHOP ORDERS
ACCT. NO. | SERIAL NO.
DATE ISSD. | DATE REQD. | NO. REQD.
DELIVER TO
SURFACE TREATMENT: DEGREASE
IDENT. METH.: TAG
DWG. BY: Y. MINAMIHARA | DATE: 12-15-99
CHK. BY | DATE

LAWRENCE BERKELEY LABORATORY
UNIVERSITY OF CALIFORNIA-BERKELEY

SNS - FES MEBT
MECHANICAL BEAM TRANSPORT SYSTEMS - QUADS
RIGHT COIL WINDING

PATENT CLEAR	DWG. TYPE	SHOWN ON	SCALE	DO NOT SCALE PRINTS
MICROFILMED	DETAIL	DESIGN ACCT. NO.	CATEGORY CODE FE3312	DWG. NO. 25B1294 — SIZE A — REV. A

REQ	ITEM	PART NUMBER	DESCRIPTION
2	1		SCREW SCH .375-24UNC-2A X 4.00" LG. SST.
3	2		DOWEL PIN, .25" X 1.00" LG. BERG #D5-8
1	3	25B1264	POLE PIECE - TOP
1	4	25B1274	POLE PIECE - BOTTOM

B1

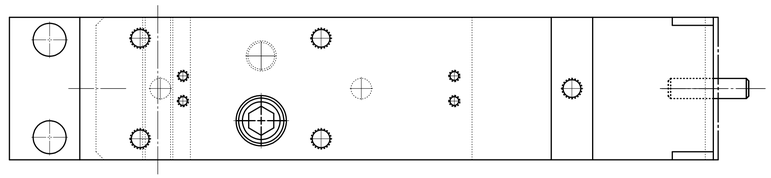

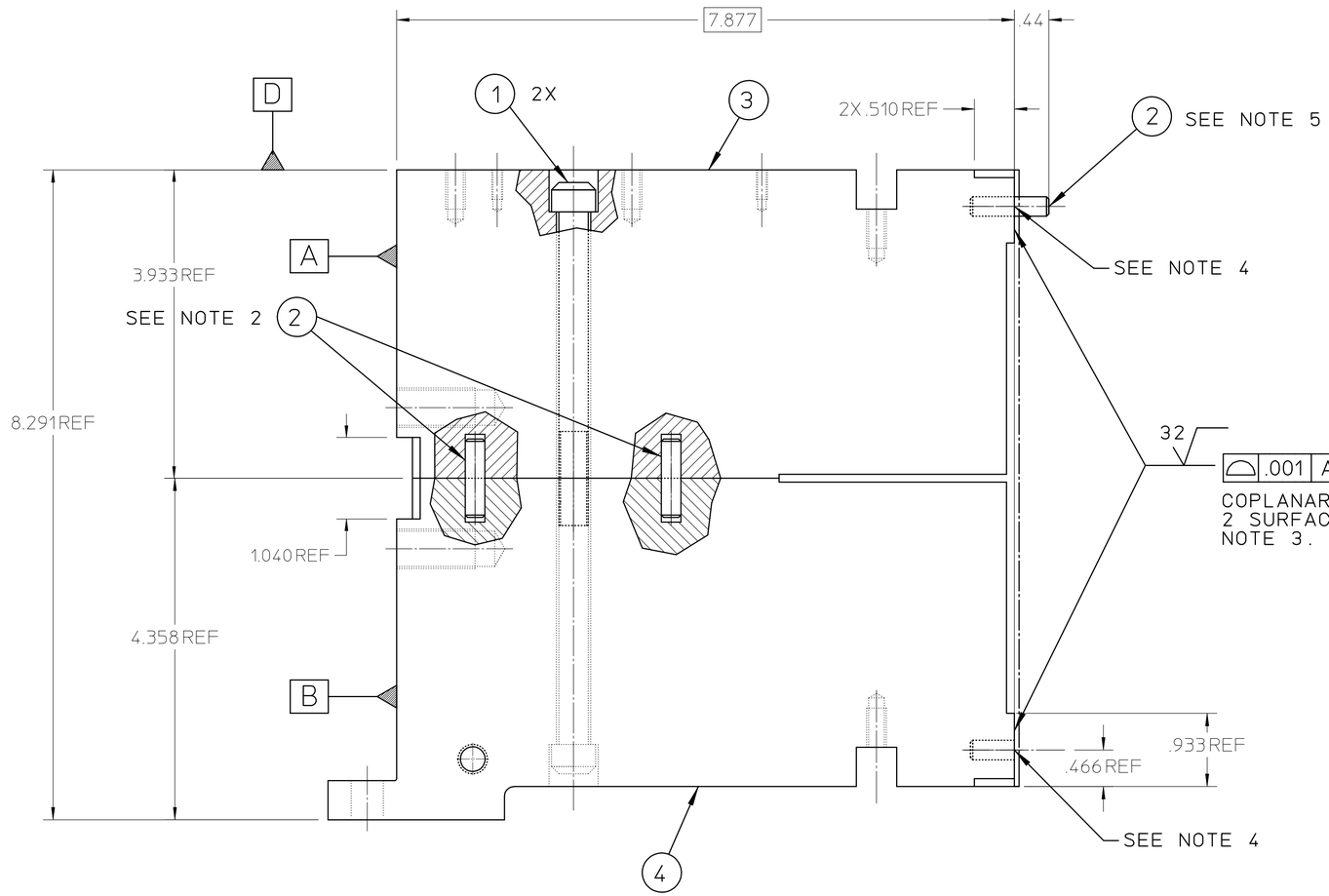

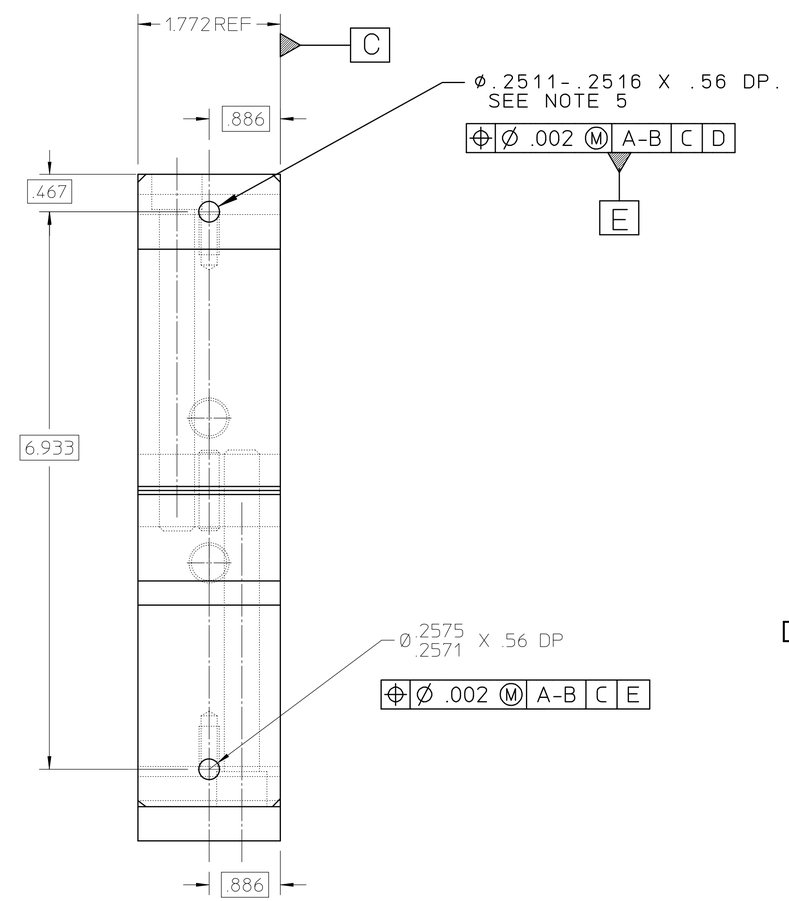

25B1324B

NOTES:
1. ALL DIMENSIONS ARE IN INCHES.
2. INSTALL 2 DOWEL PINS (PF) INTO PART 25B1274. THEN BOLT PARTS 25B1274 AND 251264 TOGETHER.
3. MACHINE VERTICAL COPLANAR FACES.
4. MACHINE DOWEL HOLE & CLEARANCE SLOT.
5. INSTALL DOWEL PIN INTO PART 25B1264 TO DIMENSION SHOWN.
6. ESTIMATED WEIGHT: 32 LBS.

REV	DWG	CHK	ZONE	DATE	CHANGES
B1	YM		D3	3-16-00	WAS SCH .375-24UNF-2A.
A	YM			3-2-00	CHANGED CHAMFER AND POLE PROFILE

UNLESS OTHERWISE SPECIFIED
TOLERANCES: .X ± - FRAC. ± 1/64; .XX ± .02 ANGLES ± 1°; .XXX ± .005 FINISH 125√
THREADS ARE CLASS 2.
CHAMFER ENDS OF ALL SCREW THREADS 30°
CUT 1.5 PITCH THRD RELIEF WITH ROUND NOSE TOOL ON MACHINE CUT THREADS.
BREAK EDGES .016 MAX. ON MACHINED WORK
REMOVE BURRS WELD SPLATTER & LOOSE SCALE
REFERENCES: ANSI Y14.5 & B46.1.

SHOP ORDERS
ACCT. NO. | SERIAL NO.
DATE ISSD. | DATE REQD. | NO. REQD.
DELIVER TO
SURFACE TREATMENT: DEGREASE
IDENT. METH.: TAG
DWG. BY: Y. MINAMIHARA | DATE: 12-15-99
CHK. BY | DATE

LAWRENCE BERKELEY LABORATORY
UNIVERSITY OF CALIFORNIA-BERKELEY

SNS - FE MEBT
QUADRUPOLE MAGNET
POLE POLE ASSEMBLY - LEFT HAND

PATENT CLEAR | DWG. TYPE: ASSY | SHOWN ON | SCALE: FULL | DO NOT SCALE PRINTS
MICROFILMED | DESIGN ACCT. NO. | CATEGORY CODE: FE3312 | DWG. NO.: 25B1324 | SIZE | REV.: B

REQ	ITEM	PART NUMBER	DESCRIPTION
2	1		SCREW SCH .375-16UNC-2A X 4.00" LG. SST.
3	2		DOWEL PIN, .25" X 1.00" LG. BERG #D5-8
1	3	25B1264	POLE PIECE - TOP
1	4	25B1274	POLE PIECE - BOTTOM

B1

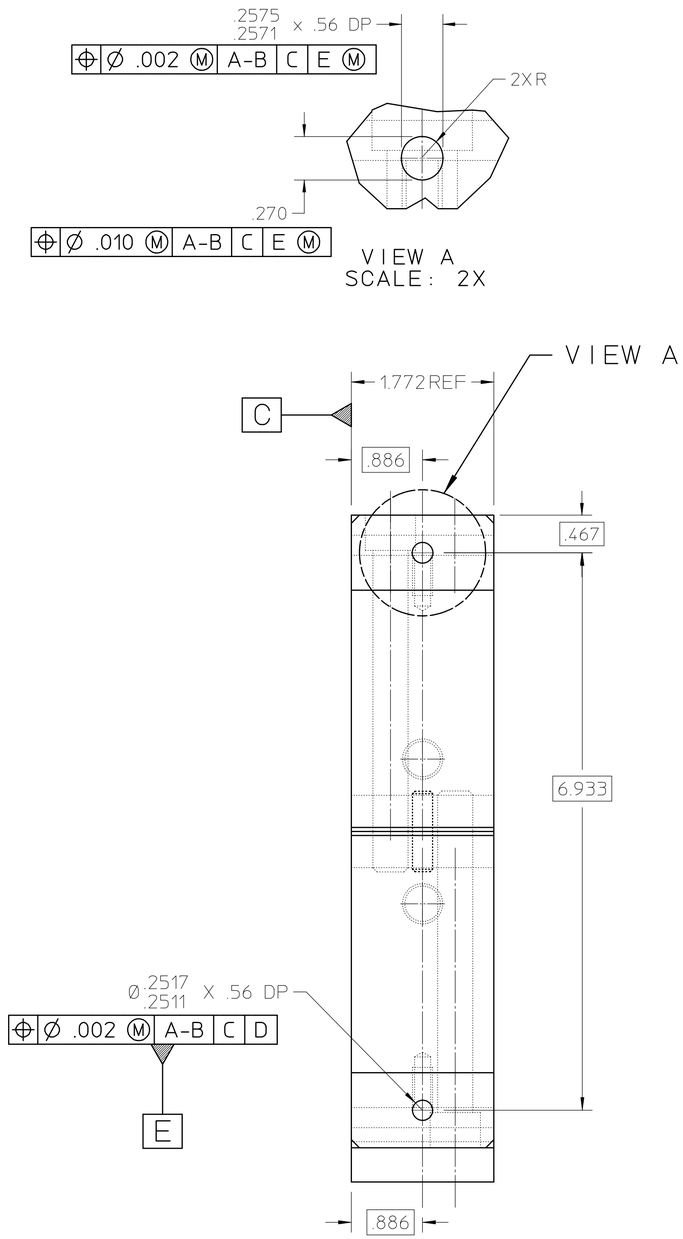

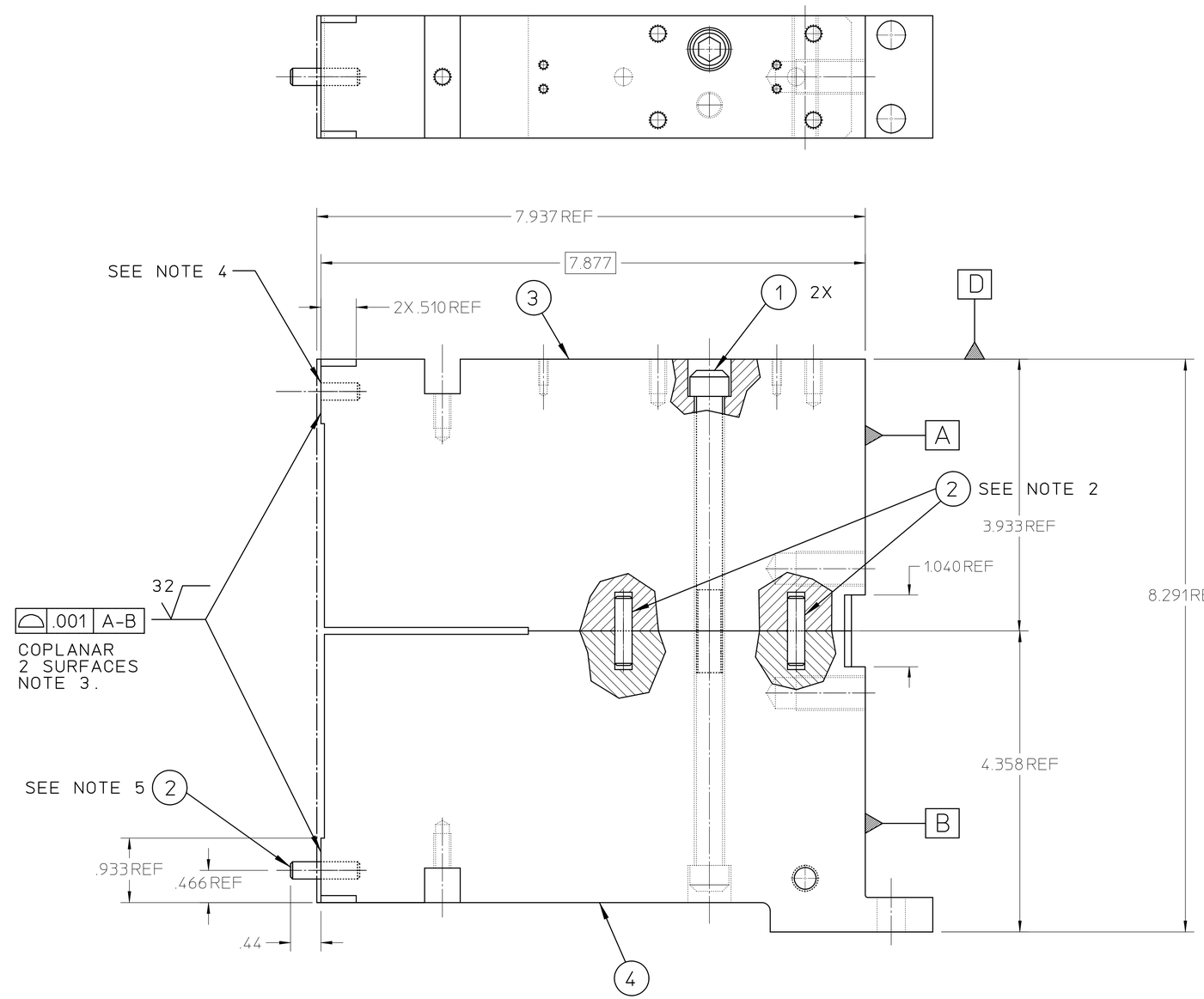

25B1334B

NOTES:
1. ALL DIMENSIONS ARE IN INCHES.
2. INSTALL 2 DOWEL PINS (PF) INTO PART 25B1274, THEN BOLT PARTS 25B1274 AND 25B1264 TOGETHER.
3. MACHINE VERTICAL COPLANAR FACES.
4. MACHINE DOWEL HOLE & CLEARANCE SLOT.
5. INSTALL DOWEL PIN INTO PART 25B1274 TO DIMENSION SHOWN.
6. ESTIMATED WEIGHT: 32 LBS.

REV	DWG	CHK	ZONE	DATE	CHANGES
B1	YM		D3	3-16-00	WAS SCH .375-24UNF-2A.
A	YM			3-2-00	CHANGED CHAMFER AND POLE PROFILE

UNLESS OTHERWISE SPECIFIED

TOLERANCES: .X ± - ; FRAC. ± 1/64 ; .XX ± .02 ; ANGLES ± 1° ; .XXX ± .005 ; FINISH 125√

THREADS ARE CLASS 2
CHAMFER ENDS OF ALL SCREW THREADS 30°.
CUT 1.5 PITCH THRD RELIEF WITH ROUND NOSE TOOL ON MACHINE CUT THREADS.
BREAK EDGES .016 MAX. ON MACHINED WORK
REMOVE BURRS WELD SPLATTER & LOOSE SCALE
REFERENCES: ANSI Y14.5 & B46.1.

SHOP ORDERS

ACCT. NO. | SERIAL NO.
DATE ISSD. | DATE REQD. | NO. REQD.
DELIVER TO
SURFACE TREATMENT: DEGREASE
IDENT. METH.: TAG
DWG. BY: Y. MINAMIHARA | DATE: 12-15-99
CHK. BY | DATE

LAWRENCE BERKELEY LABORATORY
UNIVERSITY OF CALIFORNIA-BERKELEY

SNS - FE MEBT
QUADRUPOLE MAGNET
POLE PIECE ASSEMBLY - RIGHT HAND

PATENT CLEAR	DWG. TYPE	SHOWN ON	SCALE	DO NOT SCALE PRINTS
	ASSY		FULL	
MICROFILMED	DESIGN ACCT. NO.	CATEGORY CODE	DWG. NO.	SIZE / REV.
		FE3312	25B1334	B

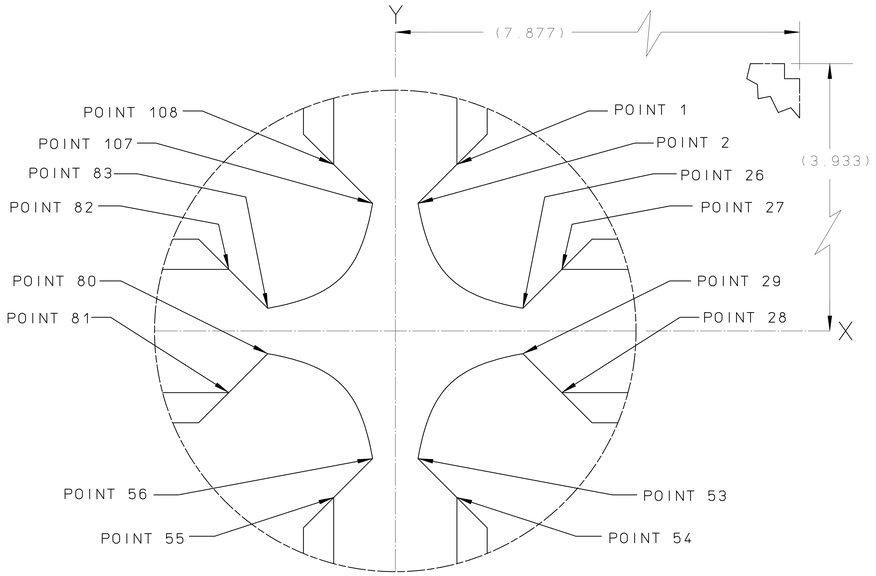

DETAIL A
SCALE: 2X

NOTES:
1. ALL DIMENSIONS ARE IN INCHES.
2. ESTIMATED WT.: 64 LBS.
3. AFTER EDM PROCESS, DISASSEMBLE AND PLATE PER LBNL SPECIFICATION M912.

4 OBTAIN INDICATED ASSEMBLY THICKNESS BY GRINDING PRIOR TO EDM PROCESS.

POLE TIP COORDINATES - ALL NUMBERS BASIC

POINT 1 TO POINT 2: STRAIGHT LINE
POINT 2 TO POINT 26: HYPERBOLA
POINT 26 TO POINT 27: STRAIGHT LINE
POINT 28 TO POINT 29: STRAIGHT LINE
POINT 29 TO POINT 53: HYPERBOLA
POINT 53 TO POINT 54: STRAIGHT LINE
POINT 55 TO POINT 56: STRAIGHT LINE
POINT 56 TO POINT 80: HYPERBOLA
POINT 81 TO POINT 82: STRAIGHT LINE
POINT 82 TO POINT 83: STRAIGHT LINE
POINT 83 TO POINT 107: HYPERBOLA
POINT 107 TO POINT 108: STRAIGHT LINE
(HYPERBOLA FORMULA $2XY = r^2$ r = 0.630 INCH)

POINT	-X-	-Y-	POINT	-X-	-Y-	POINT	-X-	-Y-
1	.510	1.378	37	.598	-.332	73	-.645	-.308
2	.188	1.056	38	.558	-.356	74	-.692	-.287
3	.201	.988	39	.518	-.383	75	-.738	-.269
4	.214	.927	40	.482	-.412	76	-.793	-.250
5	.231	.860	41	.445	-.445	77	-.860	-.231
6	.250	.793	42	.412	-.482	78	-.927	-.214
7	.269	.738	43	.383	-.518	79	-.988	-.201
8	.287	.692	44	.356	-.558	80	-1.056	-.188
9	.308	.645	45	.332	-.598	81	-1.378	-.510
10	.332	.598	46	.308	-.645	82	-1.378	.510
11	.356	.558	47	.287	-.692	83	-1.056	.188
12	.383	.518	48	.269	-.738	84	-.988	.201
13	.412	.482	49	.250	-.793	85	-.927	.214
14	.445	.445	50	.231	-.860	86	-.860	.231
15	.482	.412	51	.214	-.927	87	-.793	.250
16	.518	.383	52	.201	-.988	88	-.738	.269
17	.558	.356	53	.188	-1.056	89	-.692	.287
18	.598	.332	54	.510	-1.378	90	-.645	.308
19	.645	.308	55	-.510	-1.378	91	-.598	.332
20	.692	.287	56	-.188	-1.056	92	-.558	.356
21	.738	.269	57	-.201	-.988	93	-.518	.383
22	.793	.250	58	-.214	-.927	94	-.482	.412
23	.860	.231	59	-.231	-.860	95	-.445	.445
24	.927	.214	60	-.250	-.793	96	-.412	.482
25	.988	.201	61	-.269	-.738	97	-.383	.518
26	1.056	.188	62	-.287	-.692	98	-.356	.558
27	1.378	.510	63	-.308	-.645	99	-.332	.598
28	1.378	-.510	64	-.332	-.598	100	-.308	.645
29	1.056	-.188	65	-.356	-.558	101	-.287	.692
30	.988	-.201	66	-.383	-.518	102	-.269	.738
31	.927	-.214	67	-.412	-.482	103	-.250	.793
32	.860	-.231	68	-.445	-.445	104	-.231	.860
33	.793	-.250	69	-.482	-.412	105	-.214	.927
34	.738	-.269	70	-.518	-.383	106	-.201	.988
35	.692	-.287	71	-.558	-.356	107	-.188	1.056
36	.645	-.308	72	-.598	-.332	108	-.510	1.378

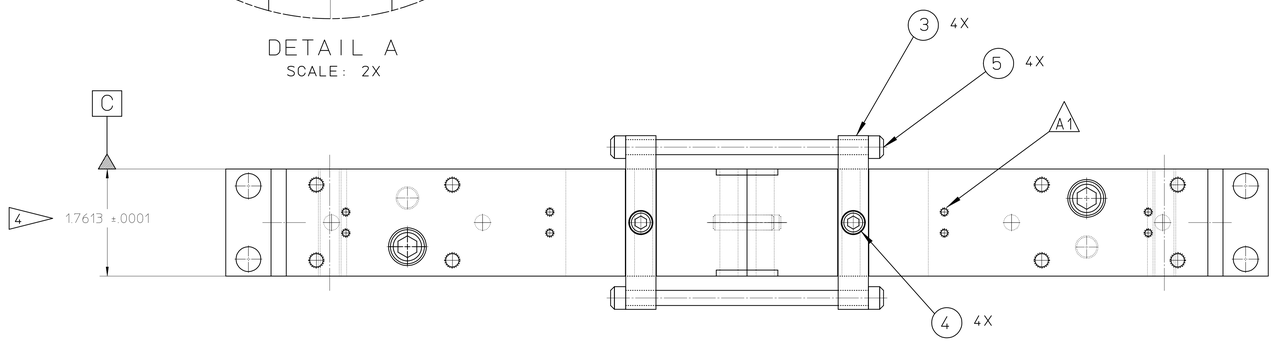

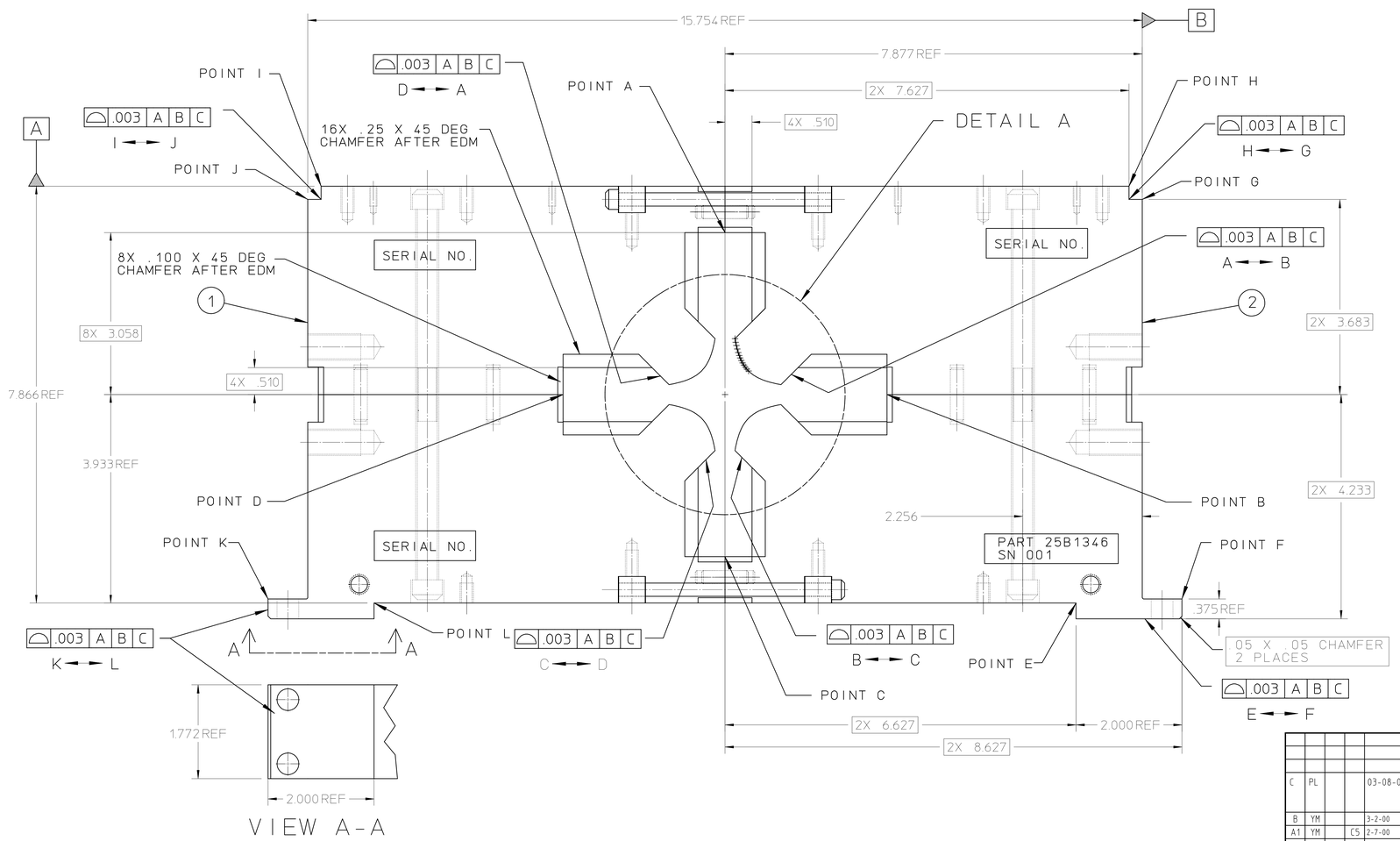

VIEW A-A

25B1346C

REQD	ITEM	PART NO.	DESCRIPTION
1	1	25B1324	POLE PIECE ASSEMBLY - LEFT HAND
1	2	25B1334	POLE PIECE ASSEMBLY - RIGHT HAND
4	3	25B1234	CROSSBAR
4	4		SCREW, SOC. HD.,1/4-20UNC-2A X .75" LONG, SST.
4	5		SCREW, SOC. HD.,1/4-20UNC-2A X 4.25" LONG, SST.

REV	DWG	CHK	ZONE	DATE	CHANGES
C	PL			03-08-01	PROFILE TOLERANCE .003 WAS .001, 8PL TO REFLECT AS-BUILT CONDITION. ADDED NOTE 4.
B	YM			3-2-00	CHANGED CHAMFER AND POLE PROFILE
A1	YM		C5	2-7-00	RELOCATED 6-32UNC TAPPED HOLES

UNLESS OTHERWISE SPECIFIED
TOLERANCES: .X ± - FRAC. ± 1/64; .XX ± .02 ANGLES ± 1°; .XXX ± .005 FINISH 125
THREADS ARE CLASS 2
CHAMFER ENDS OF ALL SCREW THREADS 30° CUT 1.5 PITCH THRD RELIEF WITH ROUND NOSE TOOL ON MACHINE CUT THREADS.
BREAK EDGES .016 MAX. ON MACHINED WORK.
REMOVE BURRS WELD SPLATTER & LOOSE SCALE
REFERENCES: ANSI Y14.5 & B46.1

SHOP ORDERS
ACCT. NO. / SERIAL NO.
DATE ISSD / DATE REQD. / NO. REQD.
DELIVER TO
SURFACE TREATMENT: DEGREASE
IDENT METH.: TAG
DWG BY: Y. MINAMIHARA DATE 12-15-99
CHK. BY / DATE

LAWRENCE BERKELEY LABORATORY
UNIVERSITY OF CALIFORNIA-BERKELEY
SNS - FE MEBT
QUADRUPOLE MAGNET
POLE PIECE ASSEMBLY - 32MM APERATURE

PATENT CLEAR	DWG. TYPE	SHOWN ON	SCALE	DO NOT SCALE PRINTS
	ASSEMBLY		FULL	

MICROFILMED	DESIGN ACCT. NO.	CATEGORY CODE	DWG. NO.	SIZE	REV.
		FE3312	25B1346	C	

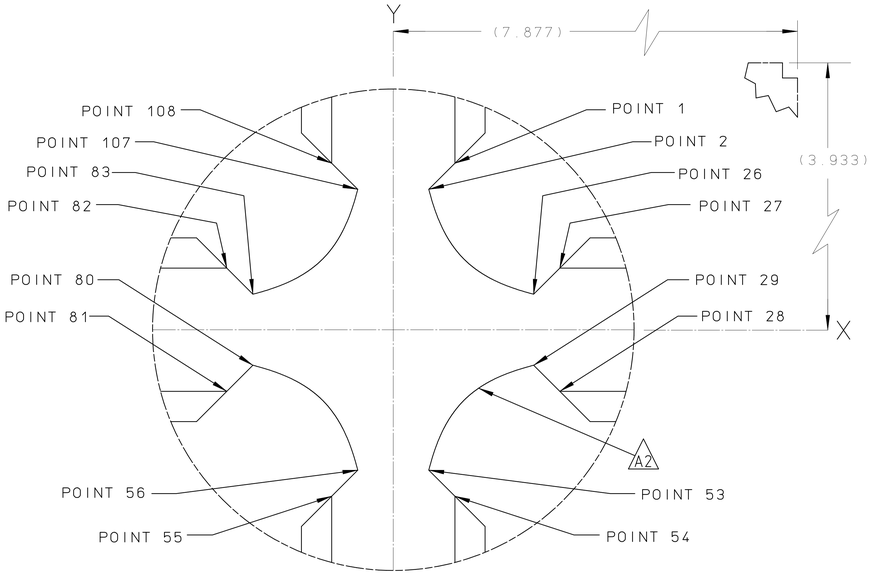

DETAIL A
SCALE: 2X

NOTES:
1. ALL DIMENSIONS ARE IN INCHES.
2. ESTIMATED WT.: 64 LBS.
3. AFTER EDM PROCESS, DISASSEMBLE AND PLATE PER LBNL SPECIFICATION M912.
4. OBTAIN INDICATED ASSEMBLY THICKNESS BY GRINDING PRIOR TO EDM PROCESS.

POLE TIP COORDINATES - ALL NUMBERS BASIC

POINT 1 TO POINT 2: STRAIGHT LINE
POINT 2 TO POINT 26: HYPERBOLA
POINT 26 TO POINT 27: STRAIGHT LINE
POINT 28 TO POINT 29: STRAIGHT LINE
POINT 29 TO POINT 53: HYPERBOLA
POINT 53 TO POINT 54: STRAIGHT LINE
POINT 55 TO POINT 56: STRAIGHT LINE
POINT 56 TO POINT 80: HYPERBOLA
POINT 81 TO POINT 82: STRAIGHT LINE
POINT 82 TO POINT 83: STRAIGHT LINE
POINT 83 TO POINT 107: HYPERBOLA
POINT 107 TO POINT 108: STRAIGHT LINE
(HYPERBOLA FORMULA $2XY = r^2$ r = 0.827 INCH)

POINT	-X-	-Y-	POINT	-X-	-Y-	POINT	-X-	-Y-
1	.510	1.378	37	.718	-.476	73	-.762	-.449
2	.294	1.162	38	.679	-.503	74	-.810	-.422
3	.308	1.110	39	.644	-.531	75	-.856	-.399
4	.328	1.041	40	.611	-.560	76	-.914	-.374
5	.353	.969	41	.585	-.585	77	-.969	-.353
6	.374	.914	42	.560	-.611	78	-1.041	-.328
7	.399	.856	43	.531	-.644	79	-1.110	-.308
8	.422	.810	44	.503	-.679	80	-1.162	-.294
9	.449	.762	45	.476	-.718	81	-1.378	-.510
10	.476	.718	46	.449	-.762	82	-1.378	.510
11	.503	.679	47	.422	-.810	83	-1.162	.294
12	.531	.644	48	.399	-.856	84	-1.110	.308
13	.560	.611	49	.374	-.914	85	-1.041	.328
14	.585	.585	50	.353	-.969	86	-.969	.353
15	.611	.560	51	.328	-1.041	87	-.914	.374
16	.644	.531	52	.308	-1.110	88	-.856	.399
17	.679	.503	53	.294	-1.162	89	-.810	.422
18	.718	.476	54	.510	-1.378	90	-.762	.449
19	.762	.449	55	-.510	-1.378	91	-.718	.476
20	.810	.422	56	-.294	-1.162	92	-.679	.503
21	.856	.399	57	-.308	-1.110	93	-.644	.531
22	.914	.374	58	-.328	-1.041	94	-.611	.560
23	.969	.353	59	-.353	-.969	95	-.585	.585
24	1.041	.328	60	-.374	-.914	96	-.560	.611
25	1.110	.308	61	-.399	-.856	97	-.531	.644
26	1.162	.294	62	-.422	-.810	98	-.503	.679
27	1.378	.510	63	-.449	-.762	99	-.476	.718
28	1.378	-.510	64	-.476	-.718	100	-.449	.762
29	1.162	-.294	65	-.503	-.679	101	-.422	.810
30	1.110	-.308	66	-.531	-.644	102	-.399	.856
31	1.041	-.328	67	-.560	-.611	103	-.374	.914
32	.969	-.353	68	-.585	-.585	104	-.353	.969
33	.914	-.374	69	-.611	-.560	105	-.328	1.041
34	.856	-.399	70	-.644	-.531	106	-.308	1.110
35	.810	-.422	71	-.679	-.503	107	-.294	1.162
36	.762	-.449	72	-.718	-.476	108	-.510	1.378

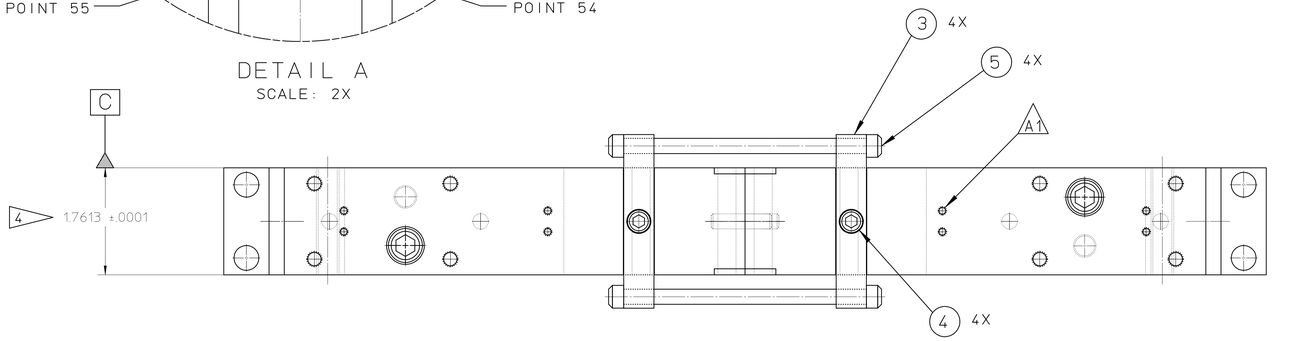

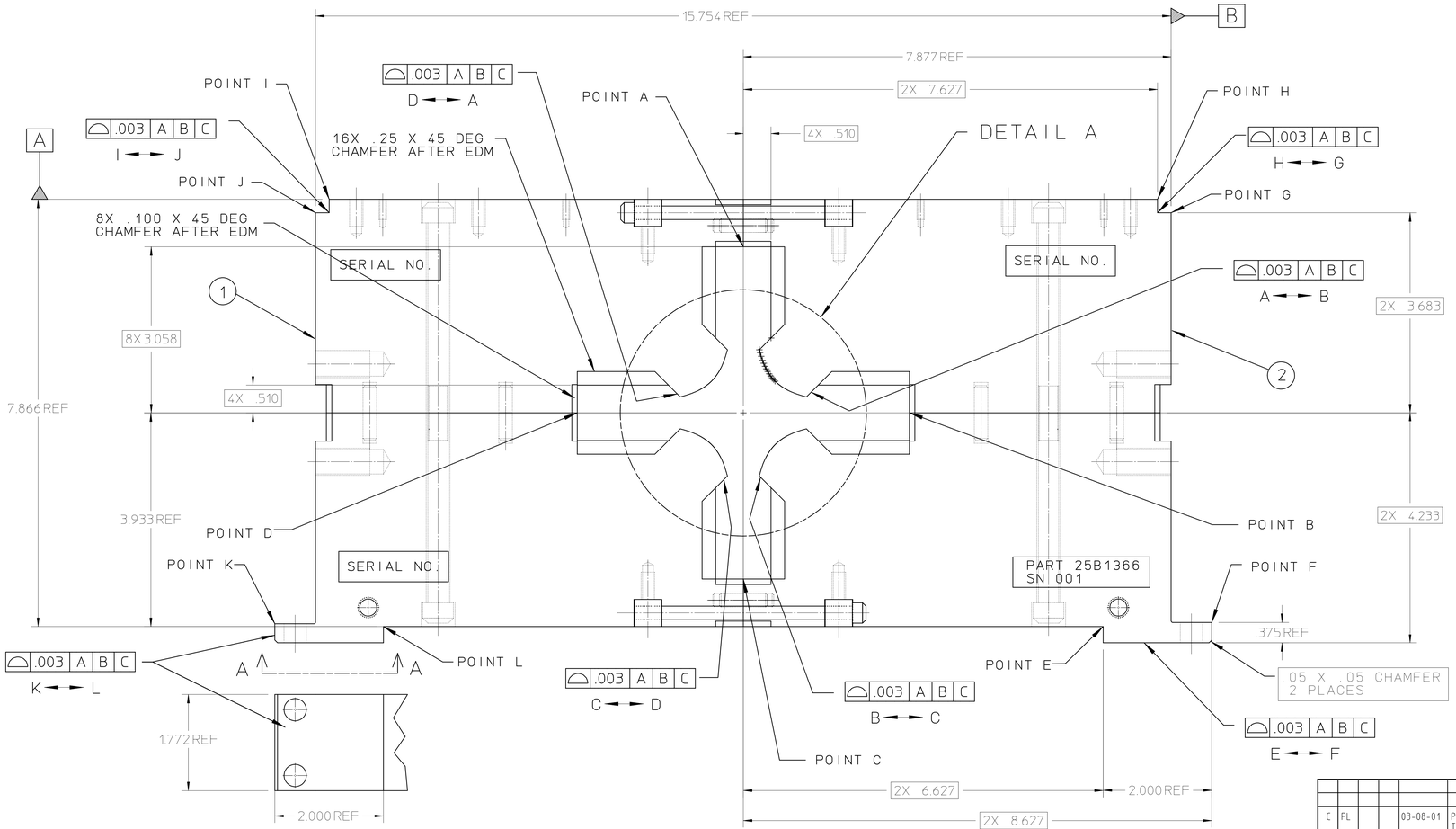

VIEW A-A

25B1366C

REQD	ITEM	PART NO.	DESCRIPTION
1	1	25B1324	POLE PIECE ASSEMBLY - LEFT HAND
1	2	25B1334	POLE PIECE ASSEMBLY - RIGHT HAND
4	3	25B1234	CROSSBAR
4	4		SCREW, SOC. HD., 1/4-20UNC-2A X .75" LONG, SST.
4	5		SCREW, SOC. HD., 1/4-20UNC-2A X 4.25" LONG, SST.

REV	DWG	CHK	ZONE	DATE	CHANGES
C	PL			03-08-01	PROFILE TOLERANCE .003 WAS .001, 8PL TO REFLECT AS-BUILT CONDITION. ADDED NOTE 4.
B	YM			3-2-00	CHANGED CHAMFER AND POLE PROFILE
A2	YM		D6	2-7-00	RELOCATED POLE PROFILE.
A1	YM		C5	2-7-00	RELOCATED 6-32UNC TAPPED HOLES

UNLESS OTHERWISE SPECIFIED
TOLERANCES: .X ± - ; .XX ± .02 ; .XXX ± .005 ; FRAC. ± 1/64 ; ANGLES ± 1° ; FINISH 125
THREADS ARE CLASS 2
CHAMFER ENDS OF ALL SCREW THREADS 30°
CUT 1.5 PITCH THRD RELIEF WITH ROUND NOSE TOOL ON MACHINE CUT THREADS.
BREAK EDGES .016 MAX. ON MACHINED WORK.
REMOVE BURRS WELD SPLATTER & LOOSE SCALE
REFERENCES: ANSI Y14.5 & B46.1

SHOP ORDERS
ACCT. NO. | SERIAL NO.
DATE ISSD. | DATE REQD. | NO. REQD.
DELIVER TO
SURFACE TREATMENT: DEGREASE
IDENT. METH.: TAG
DWG. BY: Y. MINAMIHARA | DATE: 12-15-99
CHK. BY | DATE

LAWRENCE BERKELEY LABORATORY
UNIVERSITY OF CALIFORNIA-BERKELEY
SNS - FE MEBT
QUADRUPOLE MAGNET
POLE PIECE ASSEMBLY - 42MM APERATURE

PATENT CLEAR | DWG. TYPE: ASSEMBLY | SHOWN ON | SCALE: FULL | DO NOT SCALE PRINTS
MICROFILMED | DESIGN ACCT. NO. | CATEGORY CODE: FE3312 | DWG. NO.: 25B1366 | SIZE: C | REV.

REQ	ITEM	PART NUMBER	DESCRIPTION
			OFE COPPER, .375 THICK PLATE

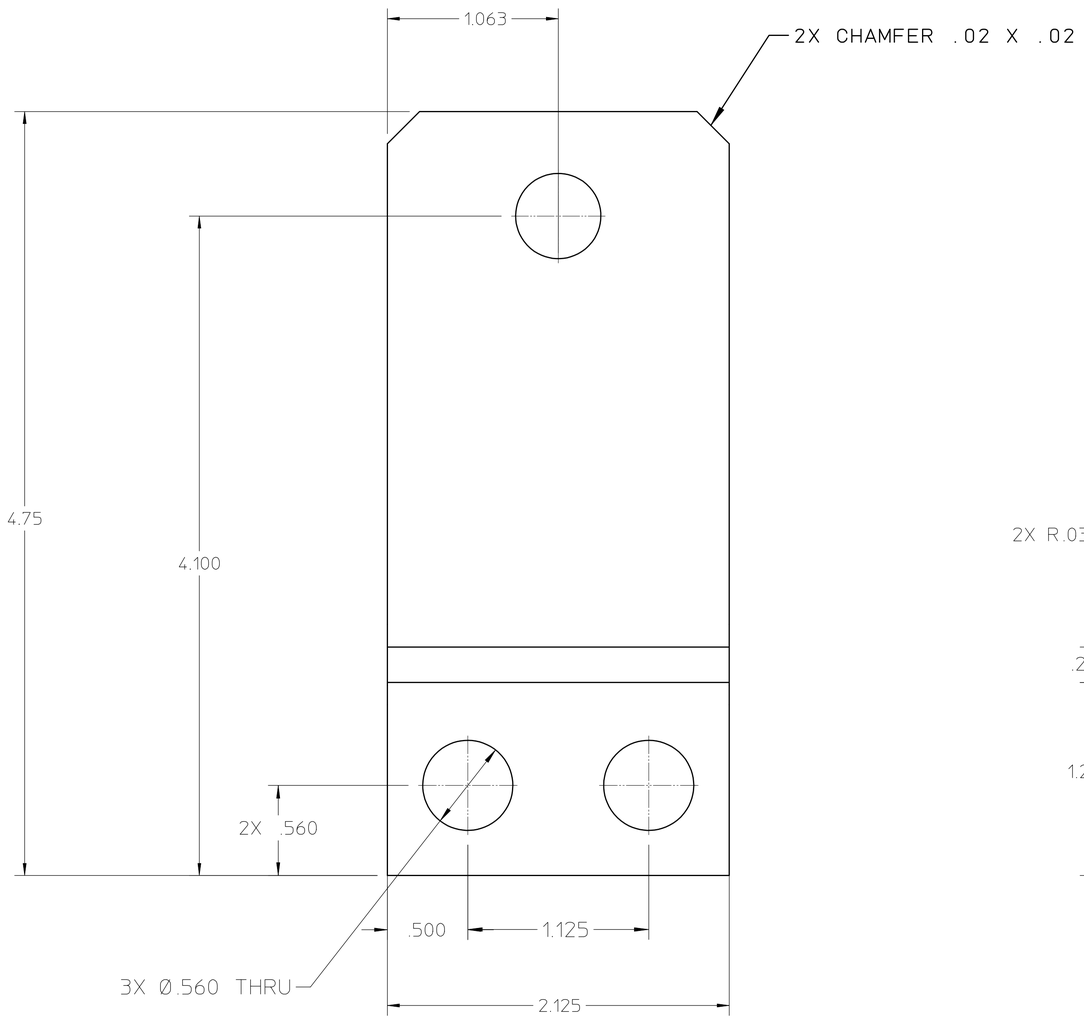

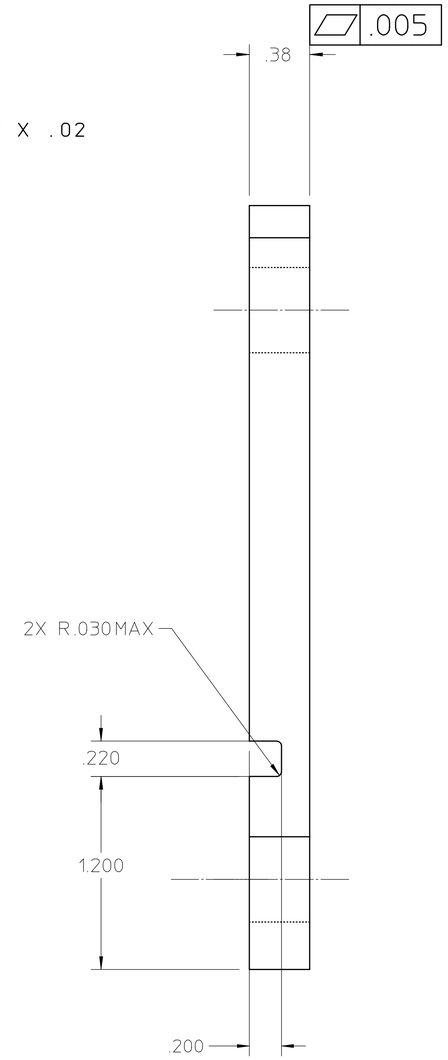

25B1404A

NOTES: 1. ALL DIMENSIONS ARE IN INCHES.

REV	DWG	CHK	ZONE	DATE	CHANGES
A	YM			11-17-00	REMOVED NOTE 2 TO GOLD FLASH PART

UNLESS OTHERWISE SPECIFIED

TOLERANCES		
.X ± -	FRAC. ± 1/64	
.XX ± .02	ANGLES ± 1°	
.XXX ± .005	FINISH 125√	

THREADS ARE CLASS 2
CHAMFER ENDS OF ALL SCREW THREADS 30°.
CUT 1.5 PITCH THRD RELIEF WITH ROUND NOSE TOOL ON MACHINE CUT THREADS.
BREAK EDGES .016 MAX. ON MACHINED WORK
REMOVE BURRS WELD SPLATTER & LOOSE SCALE
REFERENCES: ANSI Y14.5 & B46.1.

SHOP ORDERS

ACCT. NO.		SERIAL NO.	
DATE ISSD.	DATE REQD.	NO. REQD.	
DELIVER TO			
SURFACE TREATMENT	DEGREASE		
IDENT. METH.	TAG		
DWG. BY	Y. MINAMIHARA	DATE	12-15-99
CHK. BY		DATE	

LAWRENCE BERKELEY LABORATORY
UNIVERSITY OF CALIFORNIA-BERKELEY

SNS - FES MEBT

MECHANICAL BEAM TRANSPORT SYSTEMS - QUADS

JUMPER BAR FLAG

PATENT CLEAR	DWG. TYPE	SHOWN ON	SCALE 4X	DO NOT SCALE PRINTS
	DETAIL			
MICROFILMED	DESIGN ACCT. NO.	CATEGORY CODE FE3312	DWG. NO. 25B1404	SIZE A / REV. A

REQ	ITEM	PART NUMBER	DESCRIPTION
			OFE COPPER, .500 THICK PLATE

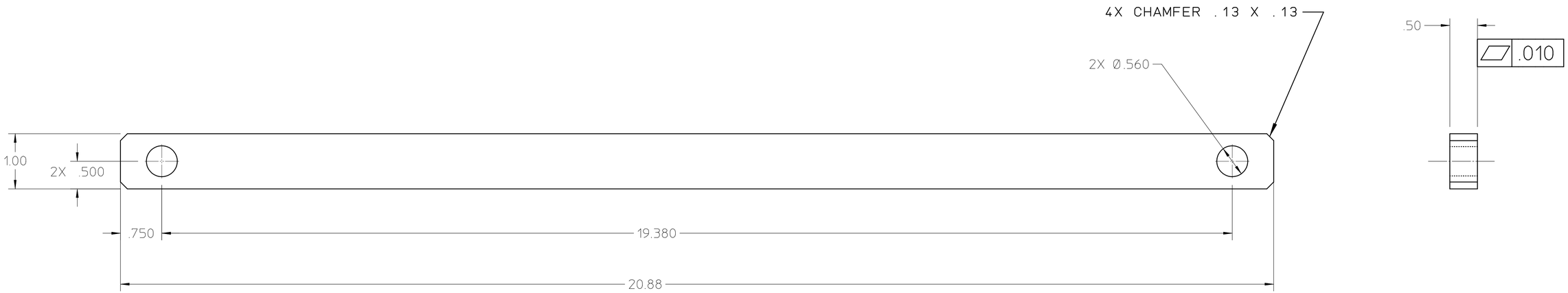

25B1414A

NOTES: 1. ALL DIMENSIONS ARE IN INCHES.

2. SILVER PLATE 0.0003/0.0005" THICK.

A1

REV	DWG	CHK	ZONE	DATE	CHANGES
A1	YM		A8	11-15-00	WAS 'FLASH GOLD' 0.00001" THK

UNLESS OTHERWISE SPECIFIED

TOLERANCES		
.X ± -	FRAC. ±1/64	
.XX ± .02	ANGLES ±1°	
.XXX ± .005	FINISH 125√	

THREADS ARE CLASS 2
CHAMFER ENDS OF ALL SCREW THREADS 30°.
CUT 1.5 PITCH THRD RELIEF WITH ROUND NOSE TOOL ON MACHINE CUT THREADS.
BREAK EDGES .016 MAX. ON MACHINED WORK
REMOVE BURRS WELD SPLATTER & LOOSE SCALE
REFERENCES: ANSI Y14.5 & B46.1.

SHOP ORDERS

ACCT. NO.		SERIAL NO.	
DATE ISSD.	DATE REQD.	NO. REQD.	
DELIVER TO			
SURFACE TREATMENT	DEGREASE		
IDENT. METH.	TAG		
DWG. BY	Y. MINAMIHARA	DATE	12-15-99
CHK. BY		DATE	

LAWRENCE BERKELEY LABORATORY
UNIVERSITY OF CALIFORNIA-BERKELEY

SNS - FES MEBT

MECHANICAL BEAM TRANSPORT SYSTEMS - QUADS

JUMPER BAR

PATENT CLEAR	DWG. TYPE	SHOWN ON	SCALE 4X	DO NOT SCALE PRINTS
	DETAIL			
MICROFILMED	DESIGN ACCT. NO.	CATEGORY CODE FE3312	DWG. NO. 25B1414	SIZE A / REV. A

REQ	ITEM	PART NUMBER	DESCRIPTION
			OFE COPPER, .750 THICK PLATE

A1

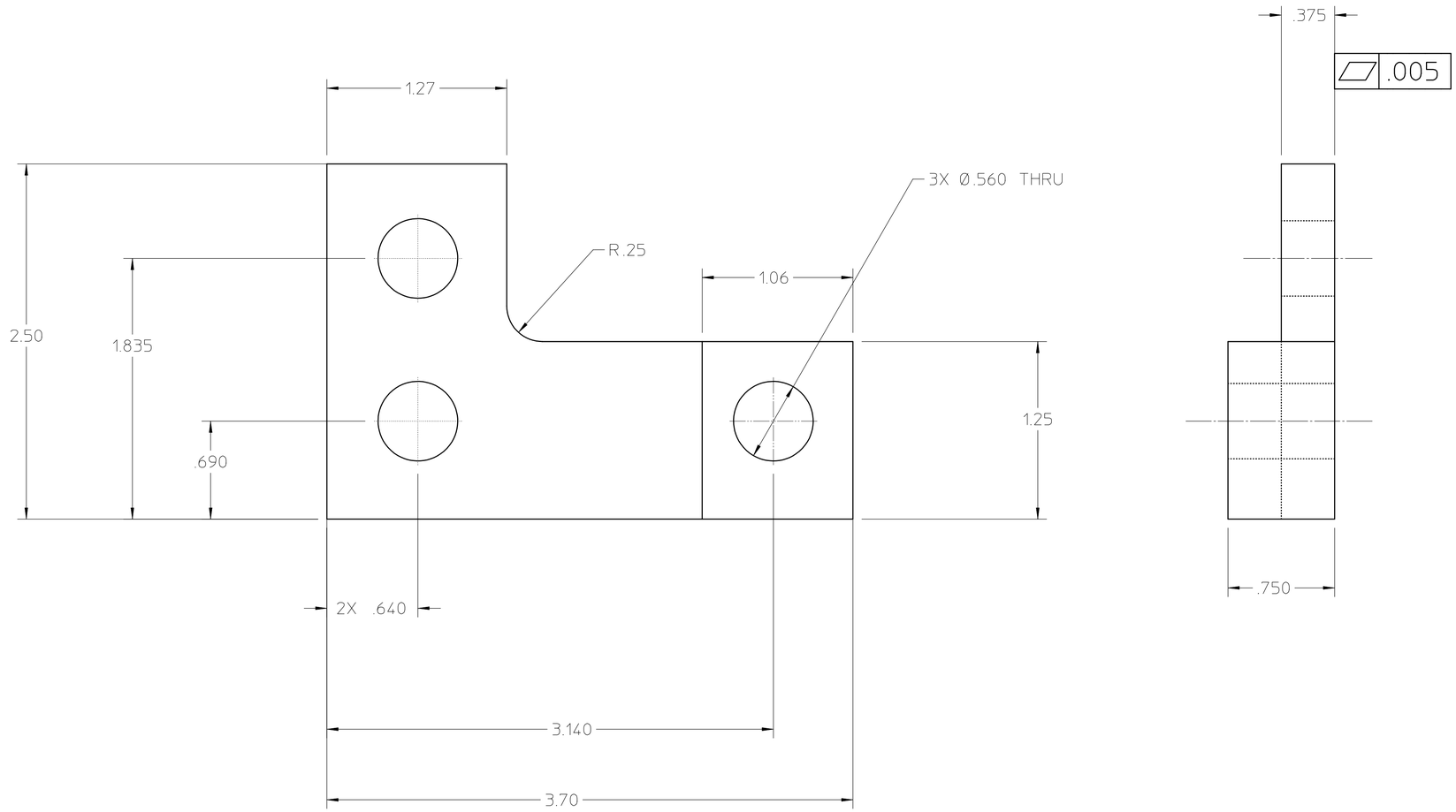

25B1424B

NOTES: 1. ALL DIMENSIONS ARE IN INCHES.

A1 2. SILVER PLATE 0.0003/0.0005" THICK.

REV	DWG	CHK	ZONE	DATE	CHANGES
B1	YM		A8	11-15-00	WAS 'FLASH GOLD' 0.00001" THK
A1	YM			5-12-00	WAS .375 THICK.

UNLESS OTHERWISE SPECIFIED

TOLERANCES: .X ± – | FRAC. ±1/64 | .XX ± .02 | ANGLES ±1° | .XXX ± .005 | FINISH 125√

THREADS ARE CLASS 2
CHAMFER ENDS OF ALL SCREW THREADS 30°.
CUT 1.5 PITCH THRD RELIEF WITH ROUND NOSE TOOL ON MACHINE CUT THREADS.
BREAK EDGES .016 MAX. ON MACHINED WORK
REMOVE BURRS WELD SPLATTER & LOOSE SCALE
REFERENCES: ANSI Y14.5 & B46.1.

SHOP ORDERS

ACCT. NO. | SERIAL NO.
DATE ISSD. | DATE REQD. | NO. REQD.
DELIVER TO
SURFACE TREATMENT: DEGREASE
IDENT. METH.: TAG
DWG. BY: Y. MINAMIHARA | DATE: 12-15-99
CHK. BY | DATE

LAWRENCE BERKELEY LABORATORY
UNIVERSITY OF CALIFORNIA-BERKELEY

SNS - FES MEBT
MECHANICAL BEAM TRANSPORT SYSTEMS - QUADS
L-SHAPED BUS-BAR

PATENT CLEAR	DWG. TYPE	SHOWN ON	SCALE	DO NOT SCALE PRINTS
	DETAIL		4X	
MICROFILMED	DESIGN ACCT. NO.	CATEGORY CODE	DWG. NO.	SIZE / REV.
		FE3312	25B1424	B

REQ	ITEM	PART NUMBER	DESCRIPTION
			OFE COPPER, .375 THICK PLATE

A1

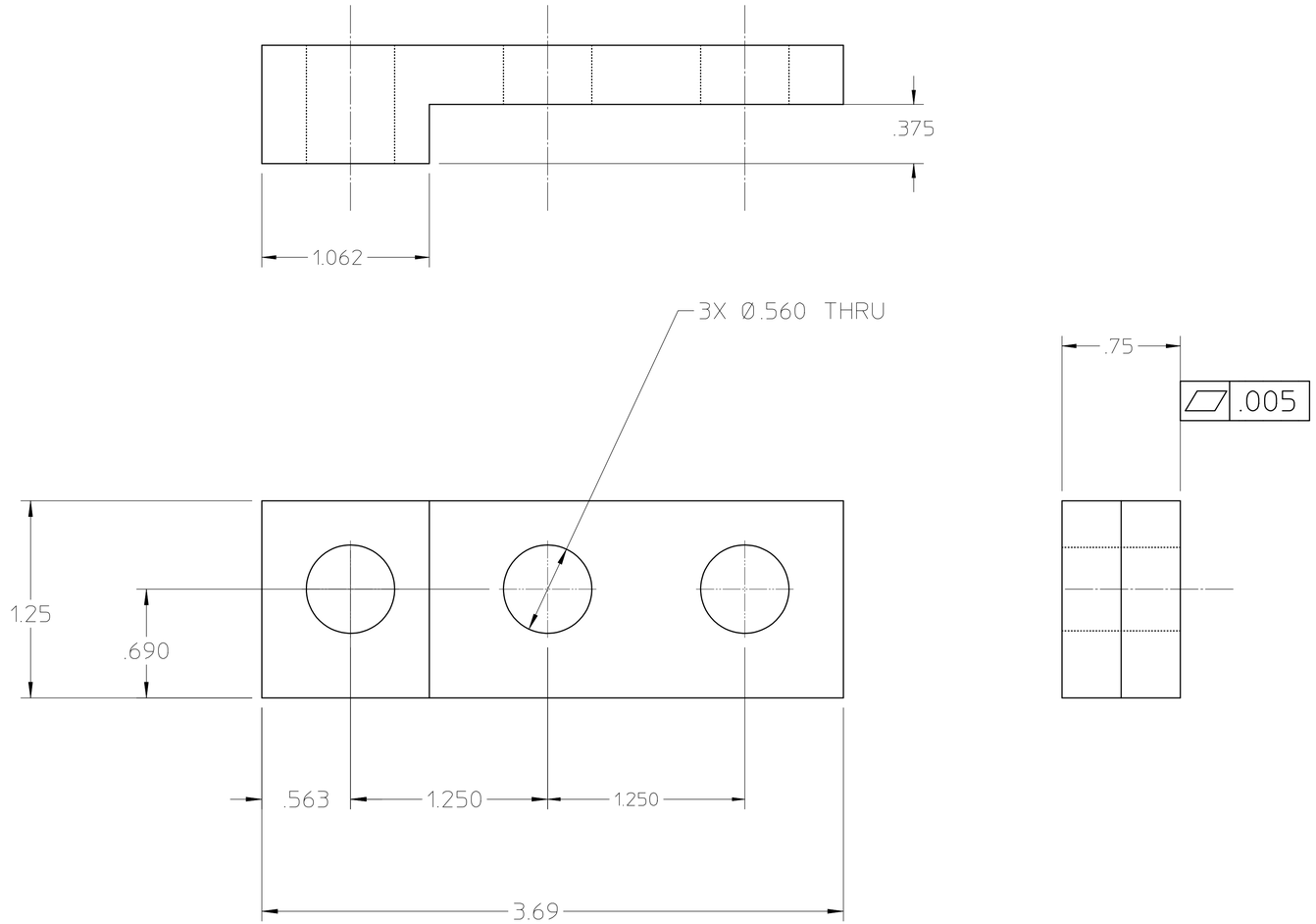

25B1434A

NOTES: 1. ALL DIMENSIONS ARE IN INCHES.

2. ELECTROPLATE 'FLASH GOLD' ALL SURFACES .00001 THICK.

REV	DWG	CHK	ZONE	DATE	CHANGES
A1	YM			5-12-00	WAS .375 THICK.

UNLESS OTHERWISE SPECIFIED

TOLERANCES	
.X ± -	FRAC. ±1/64
.XX ± .02	ANGLES ±1°
.XXX ± .005	FINISH 125√

THREADS ARE CLASS 2
CHAMFER ENDS OF ALL SCREW THREADS 30°.
CUT 1.5 PITCH THRD RELIEF WITH ROUND NOSE TOOL ON MACHINE CUT THREADS.
BREAK EDGES .016 MAX. ON MACHINED WORK
REMOVE BURRS WELD SPLATTER & LOOSE SCALE
REFERENCES: ANSI Y14.5 & B46.1.

SHOP ORDERS

ACCT. NO.		SERIAL NO.
DATE ISSD.	DATE REQD.	NO. REQD.
DELIVER TO		
SURFACE TREATMENT	DEGREASE	
IDENT. METH.	TAG	
DWG. BY	Y. MINAMIHARA	DATE 12-15-99
CHK. BY		DATE

LAWRENCE BERKELEY LABORATORY
UNIVERSITY OF CALIFORNIA-BERKELEY

SNS - FES MEBT

MECHANICAL BEAM TRANSPORT SYSTEMS - QUADS

STRAIGHT BUS-BAR

PATENT CLEAR	DWG. TYPE	SHOWN ON	SCALE	DO NOT SCALE PRINTS
	DETAIL		4X	
MICROFILMED	DESIGN ACCT. NO.	CATEGORY CODE	DWG. NO.	SIZE / REV.
	8210-23	FE3312	25B1434	A

REQ	ITEM	PART NUMBER	DESCRIPTION
			OFE COPPER, PLATE

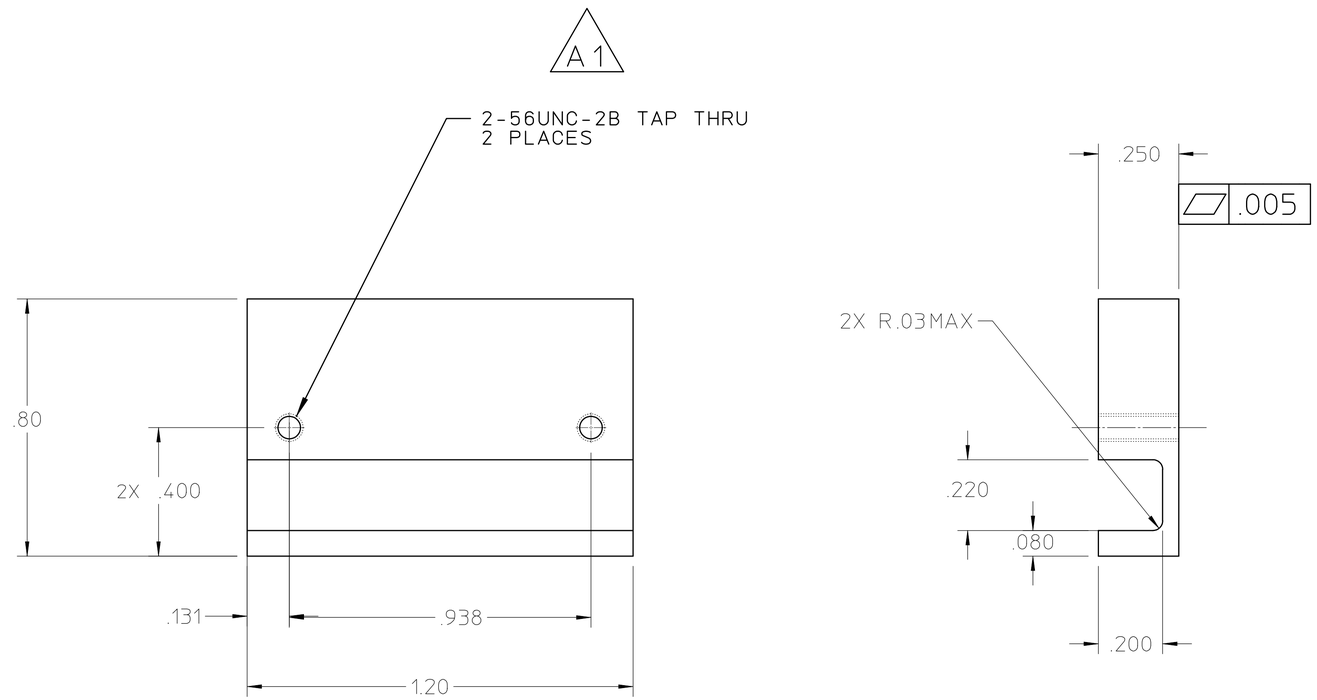

25B1444B

NOTES: 1. ALL DIMENSIONS ARE IN INCHES.

2. ELECTROPLATE 'FLASH GOLD' ALL SURFACES .00001 THICK.

REV	DWG	CHK	ZONE	DATE	CHANGES
B1	YM			11-17-00	REMOVED NOTE 2 TO GOLD FLASH PART
A1	YM			4-24-00	WAS 4-40 UNC TAP

UNLESS OTHERWISE SPECIFIED

TOLERANCES: .X ± - ; FRAC. ±1/64 ; .XX ± .02 ; ANGLES ±1° ; .XXX ± .005 ; FINISH 125√

THREADS ARE CLASS 2
CHAMFER ENDS OF ALL SCREW THREADS 30°.
CUT 1.5 PITCH THRD RELIEF WITH ROUND NOSE TOOL ON MACHINE CUT THREADS.
BREAK EDGES .016 MAX. ON MACHINED WORK
REMOVE BURRS WELD SPLATTER & LOOSE SCALE
REFERENCES: ANSI Y14.5 & B46.1.

SHOP ORDERS

ACCT. NO. | SERIAL NO.
DATE ISSD. | DATE REQD. | NO. REQD.
DELIVER TO
SURFACE TREATMENT: DEGREASE
IDENT. METH.: TAG
DWG. BY: Y. MINAMIHARA | DATE: 12-15-99
CHK. BY | DATE

LAWRENCE BERKELEY LABORATORY
UNIVERSITY OF CALIFORNIA-BERKELEY

SNS - FES MEBT
MECHANICAL BEAM TRANSPORT SYSTEMS - QUADS
THERMOSTAT MOUNTING PLATE

PATENT CLEAR	DWG. TYPE	SHOWN ON	SCALE	DO NOT SCALE PRINTS
	DETAIL		4X	
MICROFILMED	DESIGN ACCT. NO.	CATEGORY CODE	DWG. NO.	SIZE / REV.
		FE3312	25B1444	B

REQ	ITEM	PART NUMBER	DESCRIPTION
1	1	24B14444	THERMOSTAT MOUNTING PLATE
1	2		THERMOSTAT, NORMALLY CLOSED, 170 DEG.F,
			NARROW DIFFERENTIAL, SEALED THERMOSTAT,
			TEXAS INSTRUMENTS PART NO.4286-2
2	3		SCREW, BINDER HEAD, #4-40UNC-2A X .25"LG, STL

A1

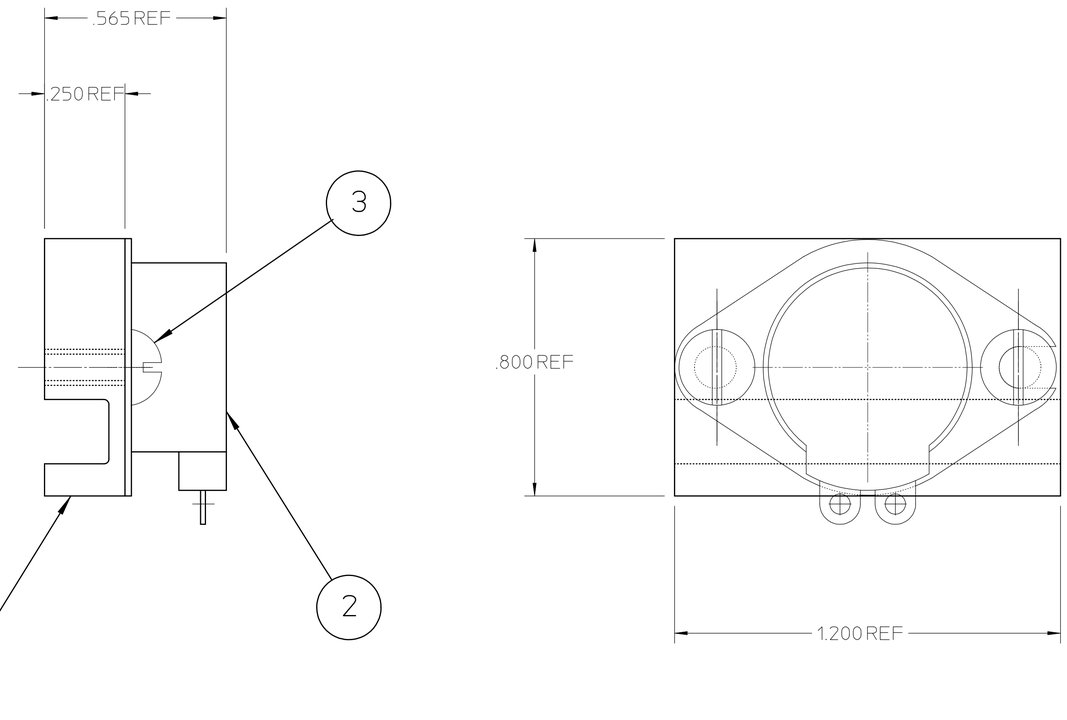

25B1454A

NOTES: 1. ALL DIMENSIONS ARE IN INCHES.

REV	DWG	CHK	ZONE	DATE	CHANGES
A1	YM		D3	2-7-00	EXPANDED DISCRIPTION OF THERMOSTAT

UNLESS OTHERWISE SPECIFIED

TOLERANCES: .X ± - ; .XX ± .02 ; .XXX ± .005 ; FRAC. ± 1/64 ; ANGLES ± 1° ; FINISH 125√

THREADS ARE CLASS 2
CHAMFER ENDS OF ALL SCREW THREADS 30°.
CUT 1.5 PITCH THRD RELIEF WITH ROUND NOSE TOOL ON MACHINE CUT THREADS.
BREAK EDGES .016 MAX. ON MACHINED WORK
REMOVE BURRS WELD SPLATTER & LOOSE SCALE
REFERENCES: ANSI Y14.5 & B46.1.

SHOP ORDERS

ACCT. NO. | SERIAL NO.
DATE ISSD. | DATE REQD. | NO. REQD.
DELIVER TO
SURFACE TREATMENT: DEGREASE
IDENT. METH.: TAG
DWG. BY: Y. MINAMIHARA | DATE: 12-15-99
CHK. BY | DATE

LAWRENCE BERKELEY LABORATORY
UNIVERSITY OF CALIFORNIA-BERKELEY

SNS - FES MEBT
MECHANICAL BEAM TRANSPORT SYSTEMS - QUADS
THERMOSTAT ASSEMBLY

PATENT CLEAR	DWG. TYPE	SHOWN ON	SCALE	DO NOT SCALE PRINTS
	DETAIL		4X	
MICROFILMED	DESIGN ACCT. NO.	CATEGORY CODE	DWG. NO.	SIZE / REV.
		FE3312	25B1454	A

REQ	ITEM	PART NUMBER	DESCRIPTION
			#13 GAUGE SQUARE COPPER MAGNET WIRE, HEAVY
			BUILD INSULATION CONDUCTOR NOM DIM = .072"
			NOM OVERALL DIM = .078", MIN DIM = .0740"
			MAX DIM = .0781"

B1 A1

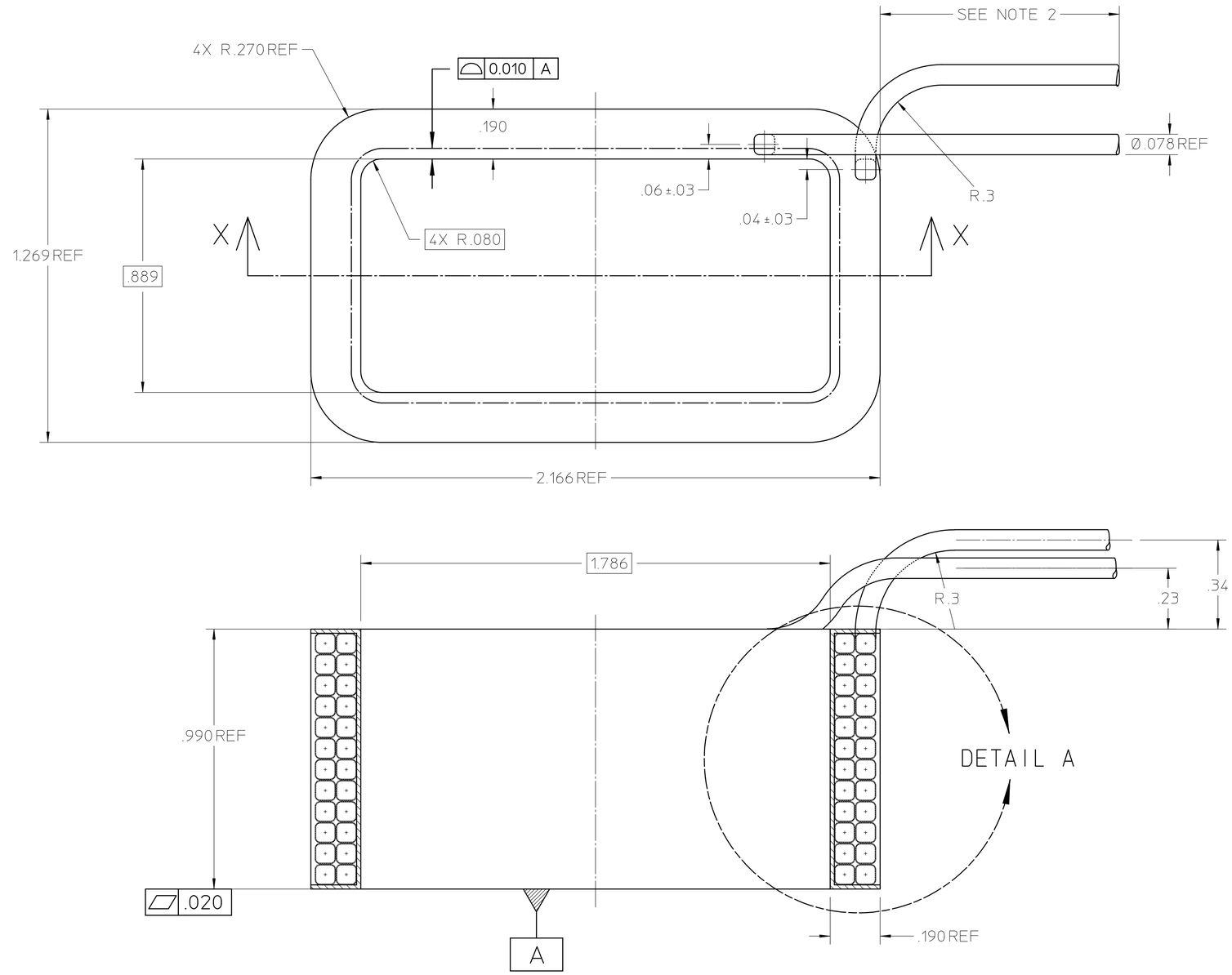

SECTION X-X

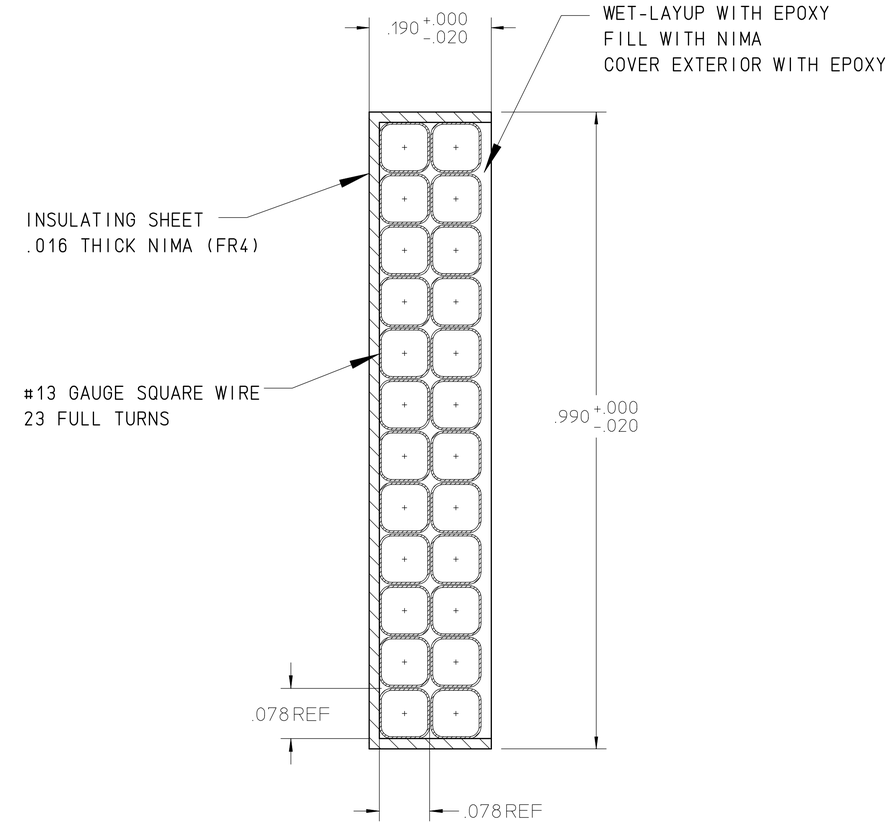

DETAIL A
X-SEC ENVELOPE
Scale: 8X

25B1464B

NOTES: 1. ALL DIMENSIONS ARE INCHES.

2. LEAVE ATLEAST 2 FEET OF WIRE FOR BOTH LEADS.

REV	DWG	CHK	ZONE	DATE	CHANGES
B1	YM		D3	3-3-00	WAS #19 GAUGE WIRE.
A1	YM		D3	2-1-00	WAS #17 GAUGE WIRE.

UNLESS OTHERWISE SPECIFIED
TOLERANCES: .X ± – ; FRAC. ±1/64 ; .XX ± .02 ; ANGLES ±1° ; .XXX ± .005 ; FINISH 125√
THREADS ARE CLASS 2
CHAMFER ENDS OF ALL SCREW THREADS 30°.
CUT 1.5 PITCH THRD RELIEF WITH ROUND NOSE TOOL ON MACHINE CUT THREADS.
BREAK EDGES .016 MAX. ON MACHINED WORK
REMOVE BURRS WELD SPLATTER & LOOSE SCALE
REFERENCES: ANSI Y14.5 & B46.1.

SHOP ORDERS
ACCT. NO. | SERIAL NO.
DATE ISSD. | DATE REQD. | NO. REQD.
DELIVER TO
SURFACE TREATMENT: DEGREASE
IDENT. METH.: TAG
DWG. BY: Y. MINAMIHARA | DATE: 12-15-99
CHK. BY | DATE

LAWRENCE BERKELEY LABORATORY
UNIVERSITY OF CALIFORNIA-BERKELEY

SNS - FES MEBT
MECHANICAL BEAM TRANSPORT SYSTEMS - QUADS
VERTICAL STEERING COIL

PATENT CLEAR	DWG. TYPE	SHOWN ON	SCALE 4X	DO NOT SCALE PRINTS
	DETAIL			
MICROFILMED	DESIGN ACCT. NO.	CATEGORY CODE FE3312	DWG. NO. 25B1464	SIZE / REV. B

REQ	ITEM	PART NUMBER	DESCRIPTION
			#13 GAUGE SQUARE COPPER MAGNET WIRE, HEAVY
			BUILD INSULATION CONDUCTOR NOM DIM = .072"
			NOM OVERALL DIM = .078", MIN DIM = .0740"
			MAX DIM = .0781"

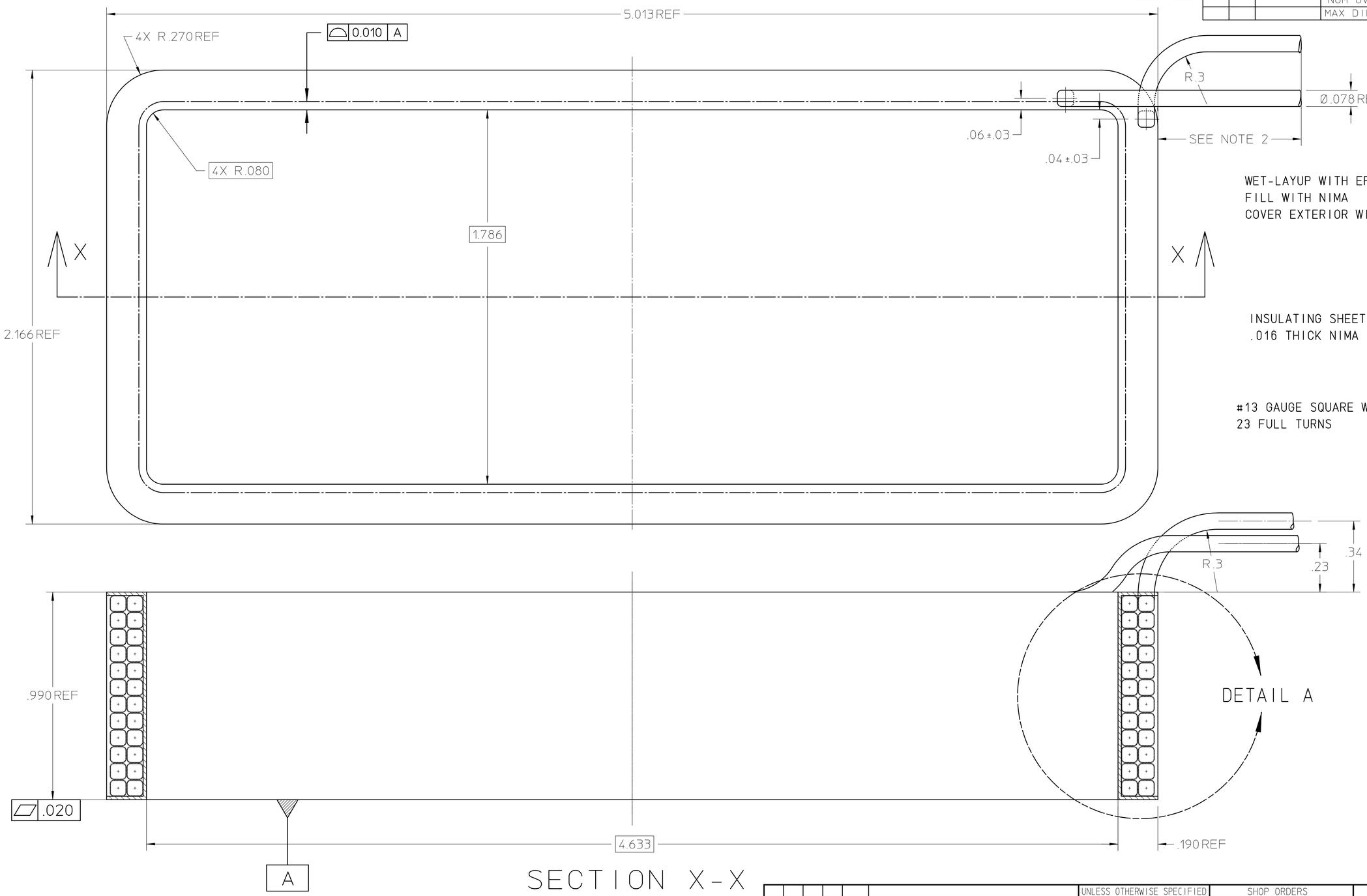

SECTION X-X

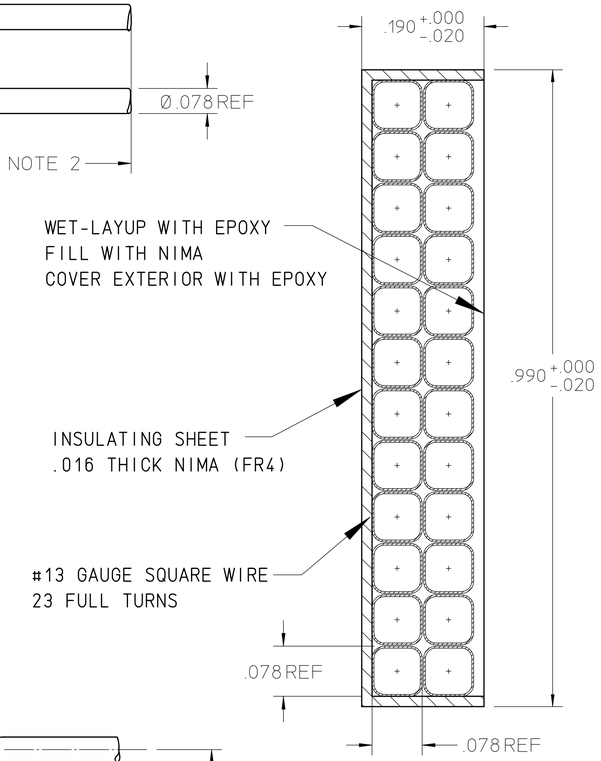

DETAIL A
X-SEC ENVELOPE
Scale: 8X

25B1474B

NOTES: 1. ALL DIMENSIONS ARE INCHES.
2. LEAVE ATLEAST 2 FEET OF WIRE FOR BOTH LEADS.

REV	DWG	CHK	ZONE	DATE	CHANGES
B2	YM		D3	3-2-00	WAS #19 GAUGE WIRE.
A1	YM		D3	2-1-00	WAS #17 GAUGE WIRE.

UNLESS OTHERWISE SPECIFIED
TOLERANCES: .X ± – FRAC. ±1/64; .XX ± .02 ANGLES ±1°; .XXX ± .005 FINISH 125√
THREADS ARE CLASS 2.
CHAMFER ENDS OF ALL SCREW THREADS 30°.
CUT 1.5 PITCH THRD RELIEF WITH ROUND NOSE TOOL ON MACHINE CUT THREADS.
BREAK EDGES .016 MAX. ON MACHINED WORK
REMOVE BURRS WELD SPLATTER & LOOSE SCALE
REFERENCES: ANSI Y14.5 & B46.1.

SHOP ORDERS
ACCT. NO. | SERIAL NO.
DATE ISSD. | DATE REQD. | NO. REQD.
DELIVER TO
SURFACE TREATMENT: DEGREASE
IDENT. METH.: TAG
DWG. BY: Y. MINAMIHARA DATE: 12-15-99
CHK. BY | DATE

LAWRENCE BERKELEY LABORATORY
UNIVERSITY OF CALIFORNIA-BERKELEY

SNS - FES MEBT
MECHANICAL BEAM TRANSPORT SYSTEMS - QUADS
HORIZONTAL STEERING COIL

PATENT CLEAR	DWG. TYPE	SHOWN ON	SCALE	DO NOT SCALE PRINTS
	DETAIL		4X	
MICROFILMED	DESIGN ACCT. NO.	CATEGORY CODE	DWG. NO.	SIZE / REV.
		FE3312	25B1474	B

REQ	ITEM	PART NUMBER	DESCRIPTION
1	1	25B1614	LEFT COIL WINDING - TERMINAL DETAIL
1	2	25B1404	JUMPER BAR FLAG
1	3	25B1224	CENTER OVERLAP FLAG
1	4	25B1454	THERMOSTAT ASSEMBLY
1	5	25D0853-1	HALF UNION PLUG

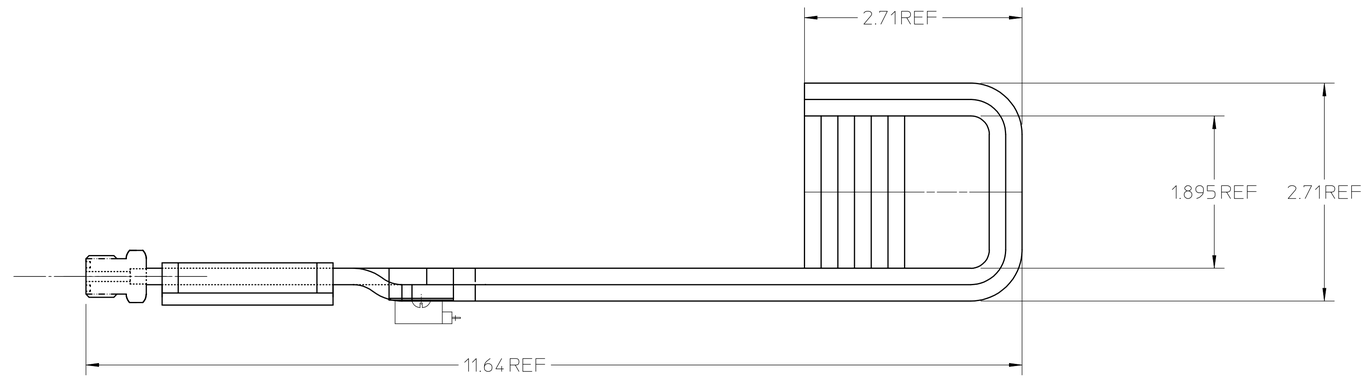

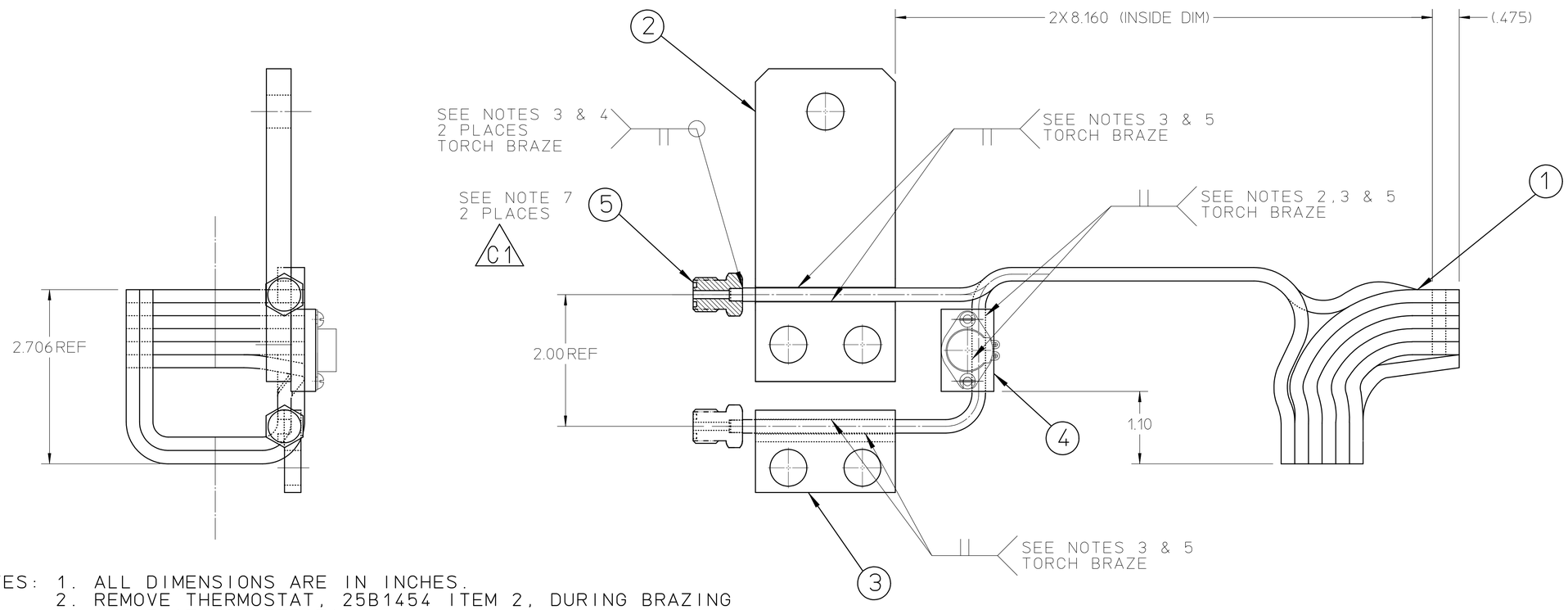

25B1484C

NOTES:
1. ALL DIMENSIONS ARE IN INCHES.
2. REMOVE THERMOSTAT, 25B1454 ITEM 2, DURING BRAZING AND PLATING OPERATIONS.
3. BRAZE PER LBNL SPEC: M912.
4. PRESSURE AND FLOW TEST PER LBNL SPEC: M912.
5. AFTER BRAZING, REPAIR KAPTON INSULATION AS REQUIRED. THEN WRAP LEADS FROM COIL TO TERMINALS WITH B-STAGE EPOXY-FIBERGLASS INSULATION. BUILD UP TO BE .015/.0.30 ON ALL SURFACES. CURE AS REQUIRED.
6. SEE DRAWING NUMBER 25B1054 FOR PLATING INSTRUCTIONS.
7. MAKE SURE FEMALE FITTING WILL FASTEN ON AFTER PLATING

REV	DWG	CHK	ZONE	DATE	CHANGES
C2	YM		A8	11-9-00	CHANGED NOTE 6 FOR PLATING
C1	YM		B6	11-9-00	ADDED NOTE 7 TO PART NO. 5
B1	YM		D3	4-24-00	WAS PART NO. 25B1244
A1	YM		D3	3-2-00	WAS PART NO. 25B1284

UNLESS OTHERWISE SPECIFIED
TOLERANCES: .X ± - ; FRAC. ± 1/64 ; .XX ± .02 ; ANGLES ± 1° ; .XXX ± .005 ; FINISH 125
THREADS ARE CLASS 2
CHAMFER ENDS OF ALL SCREW THREADS 30°.
CUT 1.5 PITCH THRD RELIEF WITH ROUND NOSE TOOL ON MACHINE CUT THREADS.
BREAK EDGES .016 MAX. ON MACHINED WORK
REMOVE BURRS WELD SPLATTER & LOOSE SCALE
REFERENCES: ANSI Y14.5 & B46.1.

SHOP ORDERS
ACCT. NO. | SERIAL NO.
DATE ISSD. | DATE REQD. | NO. REQD.
DELIVER TO
SURFACE TREATMENT: DEGREASE
IDENT. METH.: TAG
DWG. BY: Y. MINAMIHARA | DATE: 12-15-99
CHK. BY | DATE

LAWRENCE BERKELEY LABORATORY
UNIVERSITY OF CALIFORNIA-BERKELEY

SNS - FES MEBT
MECHANICAL BEAM TRANSPORT SYSTEMS - QUADS
UPPER LEFT COIL ASSEMBLY

PATENT CLEAR	DWG. TYPE	SHOWN ON	SCALE	DO NOT SCALE PRINTS
	DETAIL		FULL	
MICROFILMED	DESIGN ACCT. NO.	CATEGORY CODE	DWG. NO.	SIZE / REV.
		FE3312	25B1484	C

	REQ	ITEM	PART NUMBER	DESCRIPTION
	1	1	25B1624	RIGHT COIL WINDING - TERMINAL DETAIL
	1	2	25B1404	JUMPER BAR FLAG
	1	3	25B1224	CENTER OVERLAP FLAG
	1	4	25B1454	THERMOSTAT ASSEMBLY
B1	1	5	25D0853-1	HALF UNION PLUG

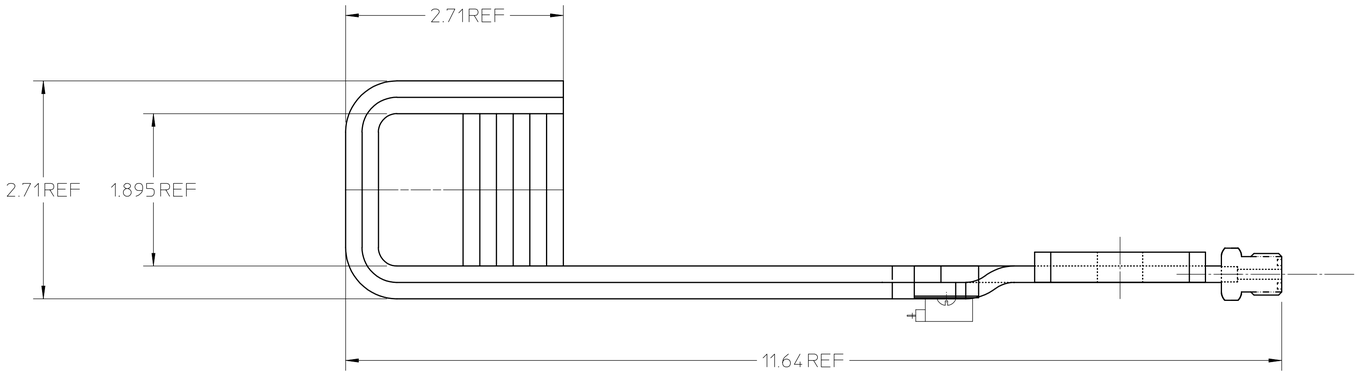

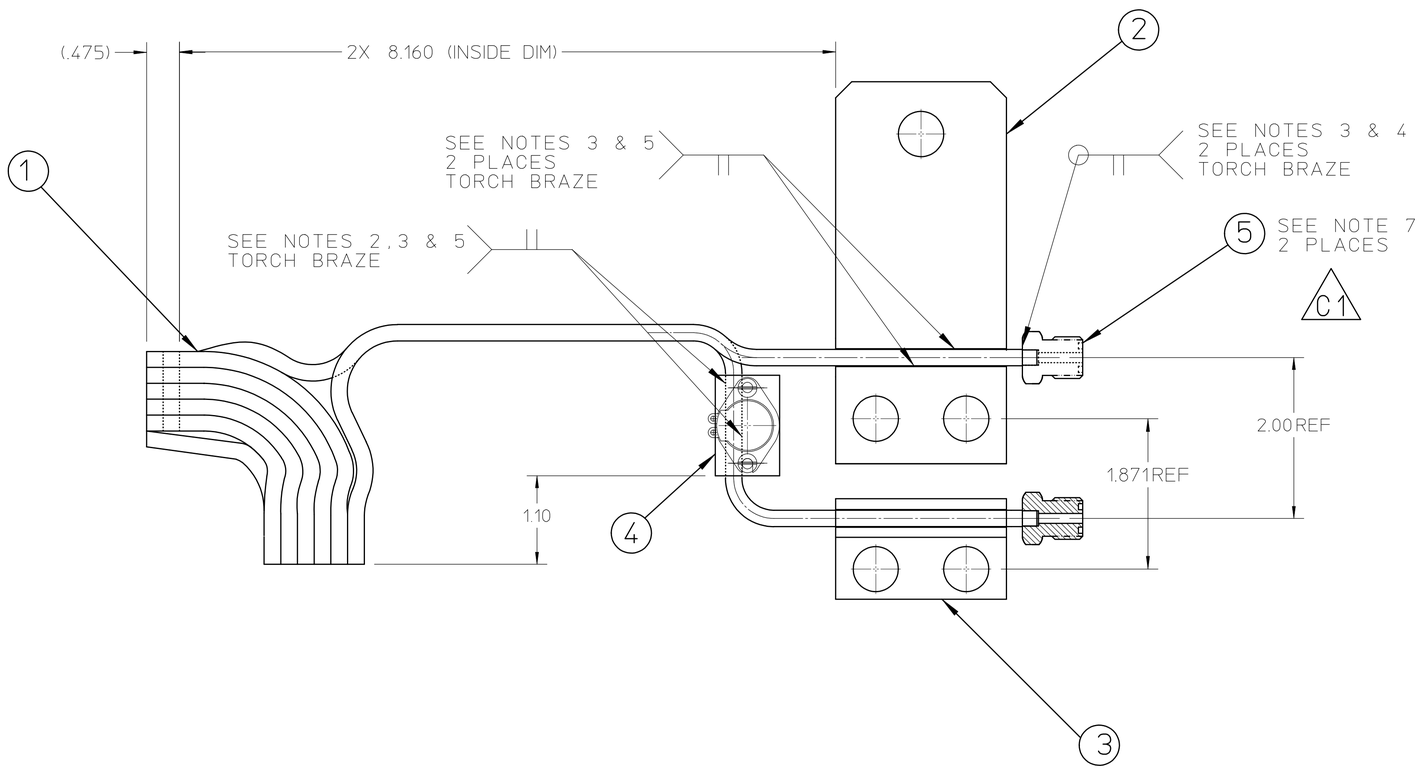

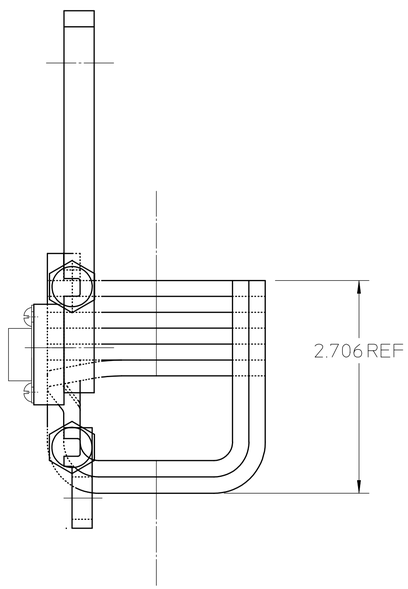

25B1494C

NOTES:
1. ALL DIMENSIONS ARE IN INCHES.
2. REMOVE THERMOSTAT, 25B1454 ITEM 2, DURING BRAZING AND PLATING OPERATIONS.
3. BRAZE PER LBNL SPEC: M912.
4. PRESSURE AND FLOW TEST PER LBNL SPEC: M912.
5. AFTER BRAZING, REPAIR KAPTON INSULATION AS REQUIRED. THEN WRAP LEADS FROM COIL TO TERMINALS WITH B-STAGE EPOXY-FIBERGLASS INSULATION. BUILD UP TO BE .015/.0.30 ON ALL SURFACES. CURE AS REQUIRED.
6. SEE DRAWING NUMBER 25B1054 FOR PLATING INSTRUCTIONS. (C2)
7. MAKE SURE FEMALE FITTING WILL FASTEN ON AFTER PLATING

REV	DWG	CHK	ZONE	DATE	CHANGES
C2	YM		A8	11-9-00	CHANGED NOTE 6 FOR PLATING
C1	YM		B5	11-9-00	ADDED NOTE 7 TO PART NO. 5
B1	YM		D3	4-24-00	WAS PART NO. 25B1244
A1	YM		D3	3-2-00	WAS PART NO. 25B1294

UNLESS OTHERWISE SPECIFIED
TOLERANCES: .X ± - ; FRAC. ± 1/64 ; .XX ± .02 ; ANGLES ± 1° ; .XXX ± .005 ; FINISH 125√
THREADS ARE CLASS 2
CHAMFER ENDS OF ALL SCREW THREADS 30°.
CUT 1.5 PITCH THRD RELIEF WITH ROUND NOSE TOOL ON MACHINE CUT THREADS.
BREAK EDGES .016 MAX. ON MACHINED WORK
REMOVE BURRS WELD SPLATTER & LOOSE SCALE
REFERENCES: ANSI Y14.5 & B46.1.

SHOP ORDERS
ACCT. NO. | SERIAL NO.
DATE ISSD | DATE REQD. | NO. REQD.
DELIVER TO
SURFACE TREATMENT: DEGREASE
IDENT. METH.: TAG
DWG. BY: Y. MINAMIHARA | DATE: 11-9-00
CHK. BY | DATE

LAWRENCE BERKELEY LABORATORY
UNIVERSITY OF CALIFORNIA-BERKELEY
SNS - FES MEBT
MECHANICAL BEAM TRANSPORT SYSTEMS - QUADS
UPPER RIGHT COIL ASSEMBLY

PATENT CLEAR	DWG. TYPE	SHOWN ON	SCALE	DO NOT SCALE PRINTS
	DETAIL		FULL	
MICROFILMED	DESIGN ACCT. NO.	CATEGORY CODE	DWG. NO.	SIZE / REV.
		FE3312	25B1494	C

	REQ	ITEM	PART NUMBER	DESCRIPTION
	1	1	25B1624	RIGHT COIL WINDING - TERMINAL DETAIL
	1	2	25B1404	CENTER OVERLAP FLAG
	1	3	25B1204	NARROW LOWER FLAG
	1	4	25B1454	THERMOSTAT ASSEMBLY
B1	1	5	25D0853-1	HALF UNION PLUG

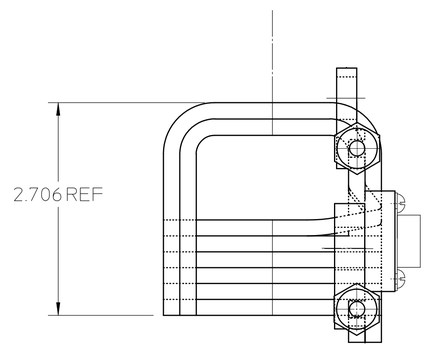

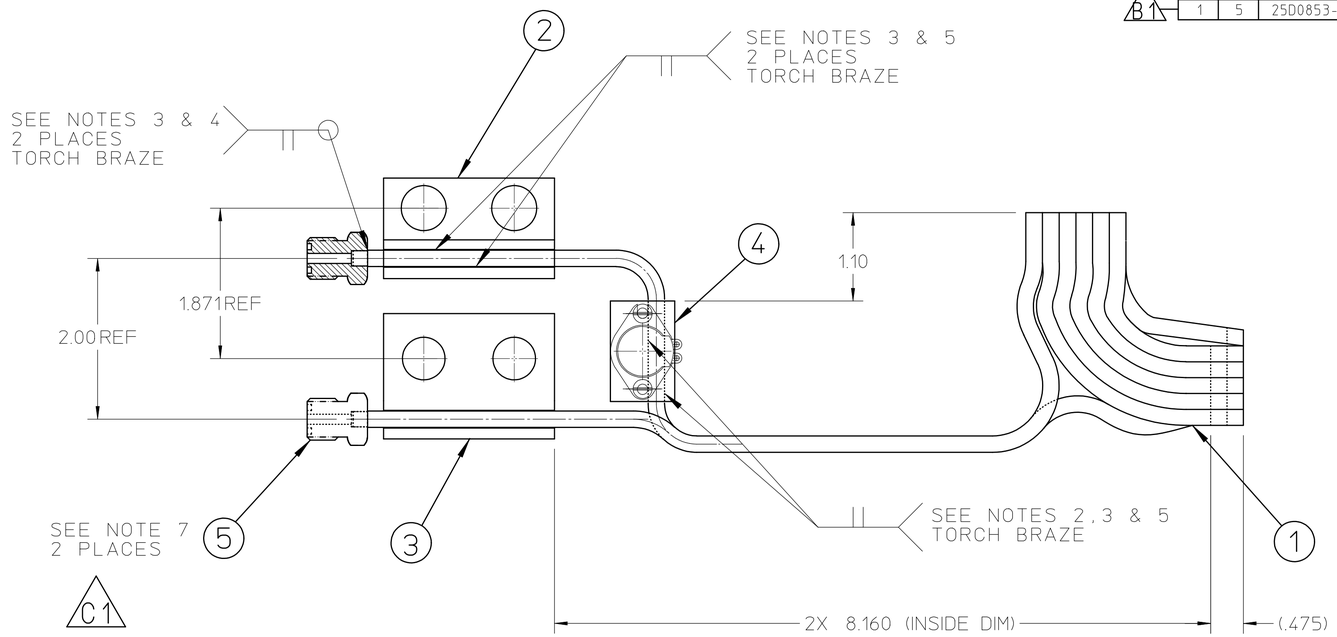

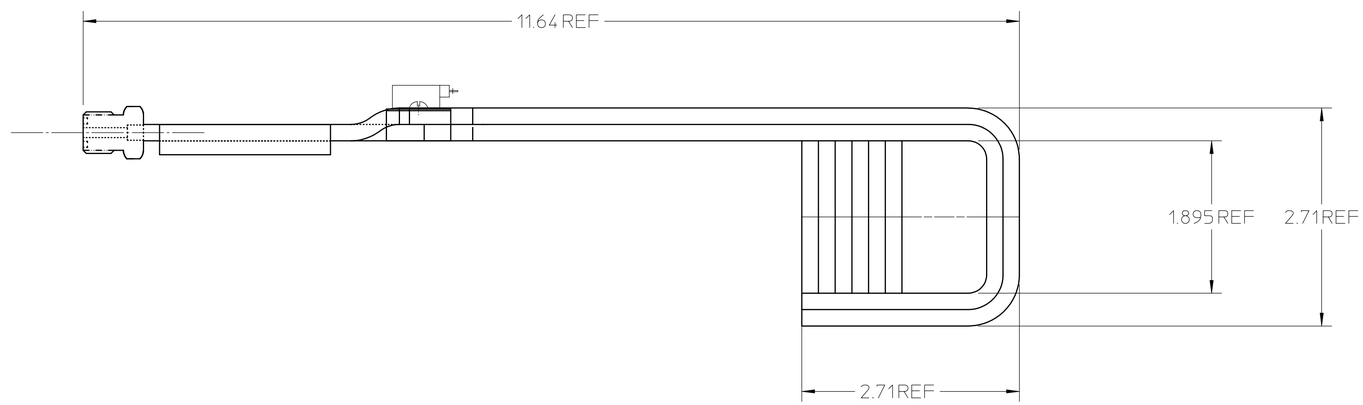

25B1504C

NOTES:
1. ALL DIMENSIONS ARE IN INCHES.
2. REMOVE THERMOSTAT, 25B1454 ITEM 2, DURING BRAZING AND PLATING OPERATIONS.
3. BRAZE PER LBNL SPEC: M912.
4. PRESSURE AND FLOW TEST PER LBNL SPEC: M912.
5. AFTER BRAZING, REPAIR KAPTON INSULATION AS REQUIRED. THEN WRAP LEADS FROM COIL TO TERMINALS WITH B-STAGE EPOXY-FIBERGLASS INSULATION. BUILD UP TO BE .015/.0.30 ON ALL SURFACES. CURE AS REQUIRED.
6. SEE DRAWING NUMBER 25B1054 FOR PLATING INSTRUCTIONS. (C2)
7. MAKE SURE FEMALE FITTING WILL FASTEN ON AFTER PLATING

REV	DWG	CHK	ZONE	DATE	CHANGES
C1	YM		A8	11-9-00	CHANGED NOTE 6 FOR PLATING
C1	YM		C6	11-9-00	ADDED NOTE 7 TO PART NO. 5
B1	YM		D3	4-24-00	WAS PART NO. 25B1244
A1	YM		D3	3-2-00	WAS PART NO. 25B1294

UNLESS OTHERWISE SPECIFIED
TOLERANCES: .X ± - ; FRAC. ± 1/64 ; .XX ± .02 ; ANGLES ± 1° ; .XXX ± .005 ; FINISH 125√
THREADS ARE CLASS 2
CHAMFER ENDS OF ALL SCREW THREADS 30°.
CUT 1.5 PITCH THRD RELIEF WITH ROUND NOSE TOOL ON MACHINE CUT THREADS.
BREAK EDGES .016 MAX. ON MACHINED WORK
REMOVE BURRS WELD SPLATTER & LOOSE SCALE
REFERENCES: ANSI Y14.5 & B46.1.

SHOP ORDERS
ACCT. NO. | SERIAL NO.
DATE ISSD | DATE REQD. | NO. REQD.
DELIVER TO
SURFACE TREATMENT: DEGREASE
IDENT. METH.: TAG
DWG. BY: Y. MINAMIHARA | DATE: 12-15-99
CHK. BY | DATE

LAWRENCE BERKELEY LABORATORY
UNIVERSITY OF CALIFORNIA-BERKELEY
SNS - FES MEBT
MECHANICAL BEAM TRANSPORT SYSTEMS - QUADS
LOWER LEFT COIL ASSEMBLY

PATENT CLEAR	DWG. TYPE	SHOWN ON	SCALE	DO NOT SCALE PRINTS
	DETAIL		FULL	
MICROFILMED	DESIGN ACCT. NO.	CATEGORY CODE	DWG. NO.	SIZE / REV.
		FE3312	25B1504	C

REQ	ITEM	PART NUMBER	DESCRIPTION
1	1	25B1614	LEFT COIL WINDING - TERMINAL DETAIL
1	2	25B1224	CENTER OVERLAP FLAG
1	3	25B1204	NARROW LOWER FLAG
1	4	25B1454	THERMOSTAT ASSEMBLY
1	5	25D0853-1	HALF UNION PLUG

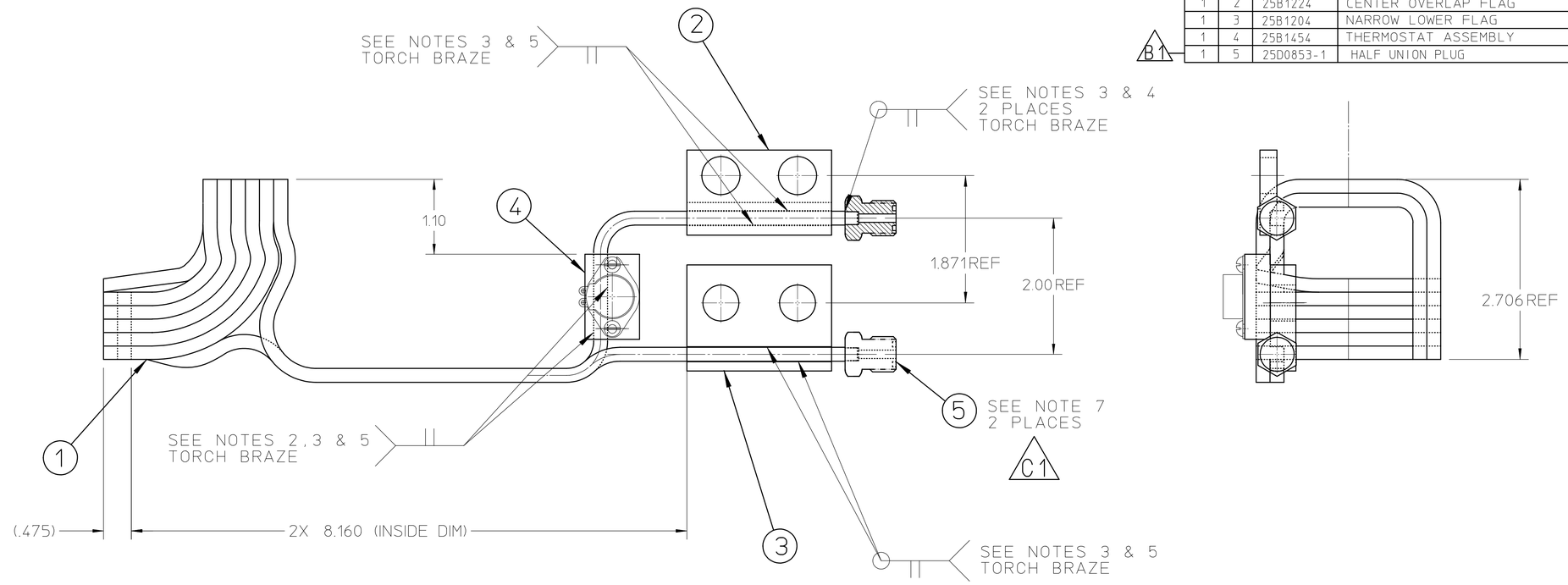

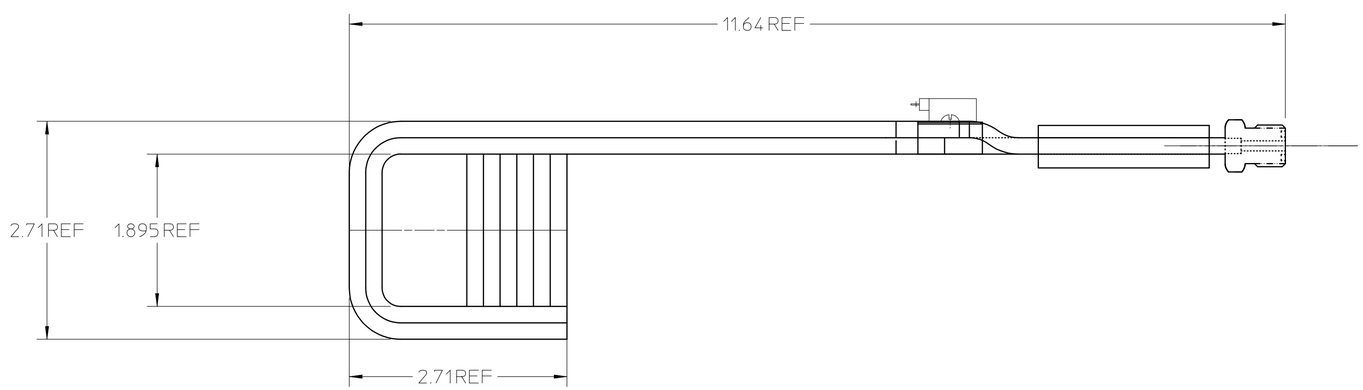

25B1514C

NOTES:
1. ALL DIMENSIONS ARE IN INCHES.
2. REMOVE THERMOSTAT, 25B1454 ITEM 2, DURING BRAZING AND PLATING OPERATIONS.
3. BRAZE PER LBNL SPEC: M912.
4. PRESSURE AND FLOW TEST PER LBNL SPEC: M912.
5. AFTER BRAZING, REPAIR KAPTON INSULATION AS REQUIRED. THEN WRAP LEADS FROM COIL TO TERMINALS WITH B-STAGE EPOXY-FIBERGLASS INSULATION. BUILD UP TO BE .015/.0.30 ON ALL SURFACES. CURE AS REQUIRED.
6. SEE DRAWING NUMBER 25B1054 FOR PLATING INSTRUCTIONS.
7. MAKE SURE FEMALE FITTING WILL FASTEN ON AFTER PLATING

REV	DWG	CHK	ZONE	DATE	CHANGES
C2	YM		A8	11-9-00	CHANGED NOTE 6 FOR PLATING
C1	YM		C3	11-9-00	ADDED NOTE 7 TO PART NO. 5
B1	YM		D3	4-24-00	WAS PART NO. 25B1244
A1	YM		D3	3-2-00	WAS PART NO. 25B1284

UNLESS OTHERWISE SPECIFIED
TOLERANCES: .X ± - FRAC. ± 1/64; .XX ± .02 ANGLES ± 1°; .XXX ± .005 FINISH 125√
THREADS ARE CLASS 2
CHAMFER ENDS OF ALL SCREW THREADS 30°.
CUT 1.5 PITCH THRD RELIEF WITH ROUND NOSE TOOL ON MACHINE CUT THREADS.
BREAK EDGES .016 MAX. ON MACHINED WORK
REMOVE BURRS WELD SPLATTER & LOOSE SCALE
REFERENCES: ANSI Y14.5 & B46.1.

SHOP ORDERS
ACCT. NO. | SERIAL NO.
DATE ISSD. | DATE REQD. | NO. REQD.
DELIVER TO
SURFACE TREATMENT: DEGREASE
IDENT. METH.: TAG
DWG. BY: Y. MINAMIHARA | DATE: 12-15-99
CHK. BY | DATE

LAWRENCE BERKELEY LABORATORY
UNIVERSITY OF CALIFORNIA-BERKELEY
SNS - FES MEBT
MECHANICAL BEAM TRANSPORT SYSTEMS - QUADS
LOWER RIGHT COIL ASSEMBLY

PATENT CLEAR	DWG. TYPE	SHOWN ON	SCALE	DO NOT SCALE PRINTS
	DETAIL		FULL	
MICROFILMED	DESIGN ACCT. NO.	CATEGORY CODE	DWG. NO.	SIZE / REV
		FE3312	25B1514	C

REQ	ITEM	PART NUMBER	DESCRIPTION
			TERMINAL BLOCK, BARRIER TYPE, CLOSED BACK,
			TWO SCREWS PER PLATE,
			37TB - MILITARY CLASSS (MIL-T-55164/1)

OBSOLETE

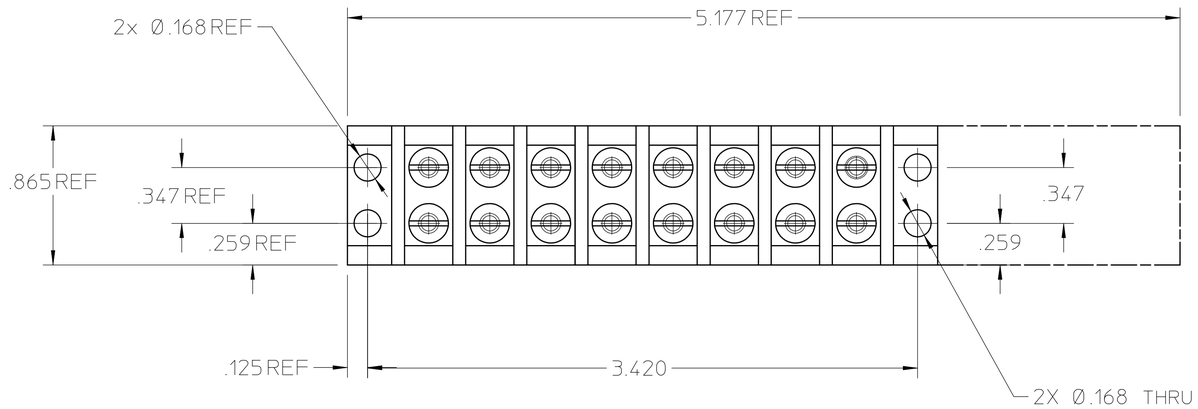

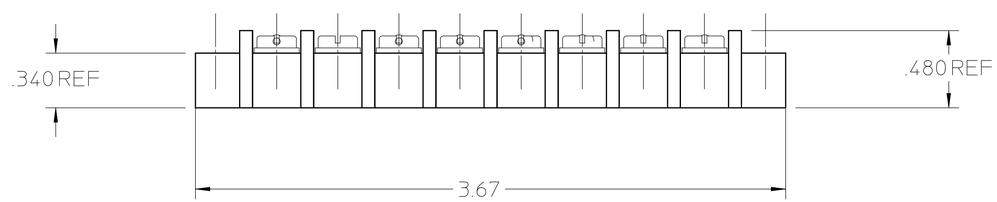

25B1524

NOTES: 1. ALL DIMENSIONS ARE IN INCHES.

REV	DWG	CHK	ZONE	DATE	CHANGES

UNLESS OTHERWISE SPECIFIED

TOLERANCES		
.X ±	FRAC. ± 1/64	
.XX ± .02	ANGLES ± 1°	
.XXX ± .005	FINISH 125√	

THREADS ARE CLASS 2
CHAMFER ENDS OF ALL SCREW THREADS 30°.
CUT 1.5 PITCH THRD RELIEF WITH ROUND NOSE TOOL ON MACHINE CUT THREADS.
BREAK EDGES .016 MAX. ON MACHINED WORK
REMOVE BURRS WELD SPLATTER & LOOSE SCALE
REFERENCES: ANSI Y14.5 & B46.1.

SHOP ORDERS

ACCT. NO.		SERIAL NO.	
DATE ISSD.	DATE REQD.	NO. REQD.	
DELIVER TO			
SURFACE TREATMENT	DEGREASE		
IDENT. METH.	TAG		
DWG. BY	Y. MINAMIHARA	DATE	12-15-99
CHK. BY		DATE	

LAWRENCE BERKELEY LABORATORY
UNIVERSITY OF CALIFORNIA-BERKELEY

SNS - FES MEBT

MECHANICAL BEAM TRANSPORT SYSTEMS - QUADS

MODIFIED TERMINAL BLOCK

PATENT CLEAR	DWG. TYPE	SHOWN ON	SCALE 2X	DO NOT SCALE PRINTS
	DETAIL			
MICROFILMED	DESIGN ACCT. NO.	CATEGORY CODE FE3312	DWG. NO. 25B1524	SIZE / REV.

REQ	ITEM	PART NUMBER	DESCRIPTION
A/R	1		CABLE, 4/0GA WELDING CABLE, 600V, CAROLPRENE
1	2		LUG FOR 4/0GA CABLE

NOT IN MCT PACKAGE

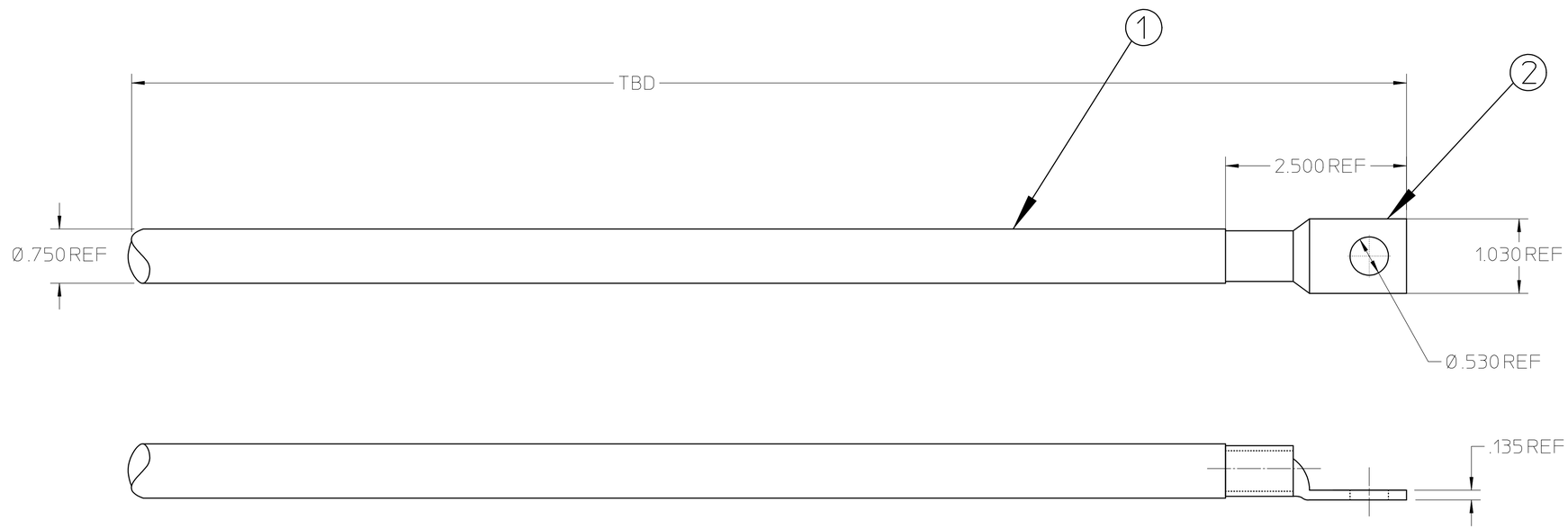

25B1534

REV	DWG	CHK	ZONE	DATE	CHANGES

UNLESS OTHERWISE SPECIFIED

TOLERANCES		
.X ± -	FRAC. ± 1/64	
.XX ± .02	ANGLES ± 1°	
.XXX ± .005	FINISH 125√	

THREADS ARE CLASS 2
CHAMFER ENDS OF ALL SCREW THREADS 30°.
CUT 1.5 PITCH THRD RELIEF WITH ROUND NOSE TOOL ON MACHINE CUT THREADS.
BREAK EDGES .016 MAX. ON MACHINED WORK
REMOVE BURRS WELD SPLATTER & LOOSE SCALE
REFERENCES: ANSI Y14.5 & B46.1.

SHOP ORDERS

ACCT. NO.		SERIAL NO.
DATE ISSD.	DATE REQD.	NO. REQD.
DELIVER TO		
SURFACE TREATMENT	DEGREASE	
IDENT. METH.	TAG	
DWG. BY	Y. MINAMIHARA	DATE 12-15-99
CHK. BY		DATE

LAWRENCE BERKELEY LABORATORY
UNIVERSITY OF CALIFORNIA-BERKELEY

SNS - FES MEBT

MECHANICAL BEAM TRANSPORT SYSTEMS - QUADS

POWER CABLE

PATENT CLEAR	DWG. TYPE	SHOWN ON	SCALE 4X	DO NOT SCALE PRINTS
	DETAIL			
MICROFILMED	DESIGN ACCT. NO.	CATEGORY CODE FE3312	DWG. NO. 25B1534	SIZE / REV.

REQ	ITEM	PART NUMBER	DESCRIPTION
A/R	1		CABLE, 6 AWG, 600V, A.I.W. CORP.
1	2		LUG FOR 4 AWG CABLE

NOT IN MCT PACKAGE

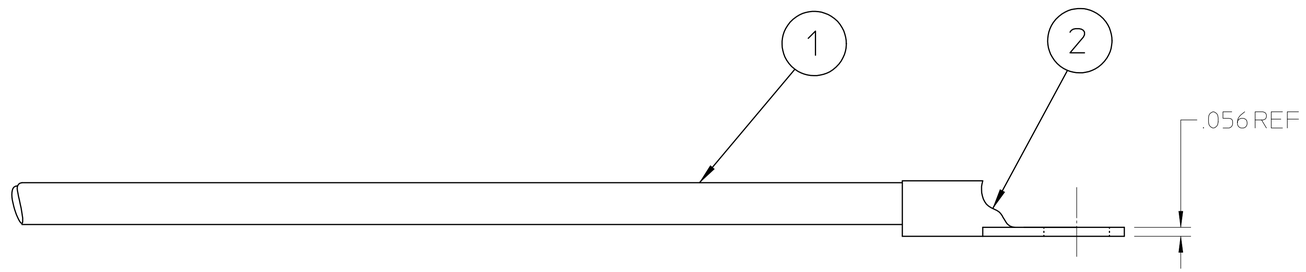

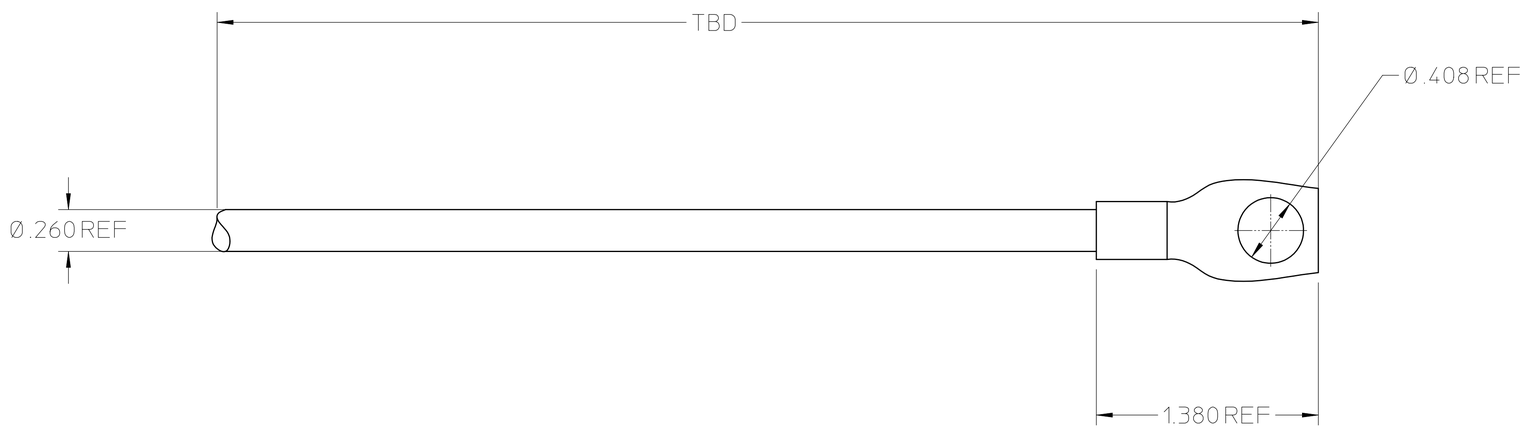

25B1544

REV	DWG	CHK	ZONE	DATE	CHANGES

UNLESS OTHERWISE SPECIFIED

TOLERANCES	
.X ± –	FRAC. ±1/64
.XX ± .02	ANGLES ±1°
.XXX ± .005	FINISH 125√

THREADS ARE CLASS 2
CHAMFER ENDS OF ALL SCREW THREADS 30°
CUT 1.5 PITCH THRD RELIEF WITH ROUND NOSE TOOL ON MACHINE CUT THREADS.
BREAK EDGES .016 MAX. ON MACHINED WORK
REMOVE BURRS WELD SPLATTER & LOOSE SCALE
REFERENCES: ANSI Y14.5 & B46.1.

SHOP ORDERS

ACCT. NO.		SERIAL NO.
DATE ISSD	DATE REQD.	NO. REQD.
DELIVER TO		
SURFACE TREATMENT	DEGREASE	
IDENT. METH.	TAG	
DWG. BY	Y. MINAMIHARA	DATE 12-15-99
CHK. BY		DATE

LAWRENCE BERKELEY LABORATORY
UNIVERSITY OF CALIFORNIA-BERKELEY

SNS - FES MEBT

MECHANICAL BEAM TRANSPORT SYSTEMS - QUADS

GROUND CABLE

PATENT CLEAR	DWG. TYPE	SHOWN ON	SCALE	DO NOT SCALE PRINTS
	DETAIL		2X	
MICROFILMED	DESIGN ACCT. NO.	CATEGORY CODE	DWG. NO.	SIZE / REV.
		FE3312	25B1544	

REQ	ITEM	PART NUMBER	DESCRIPTION
			DELRIN

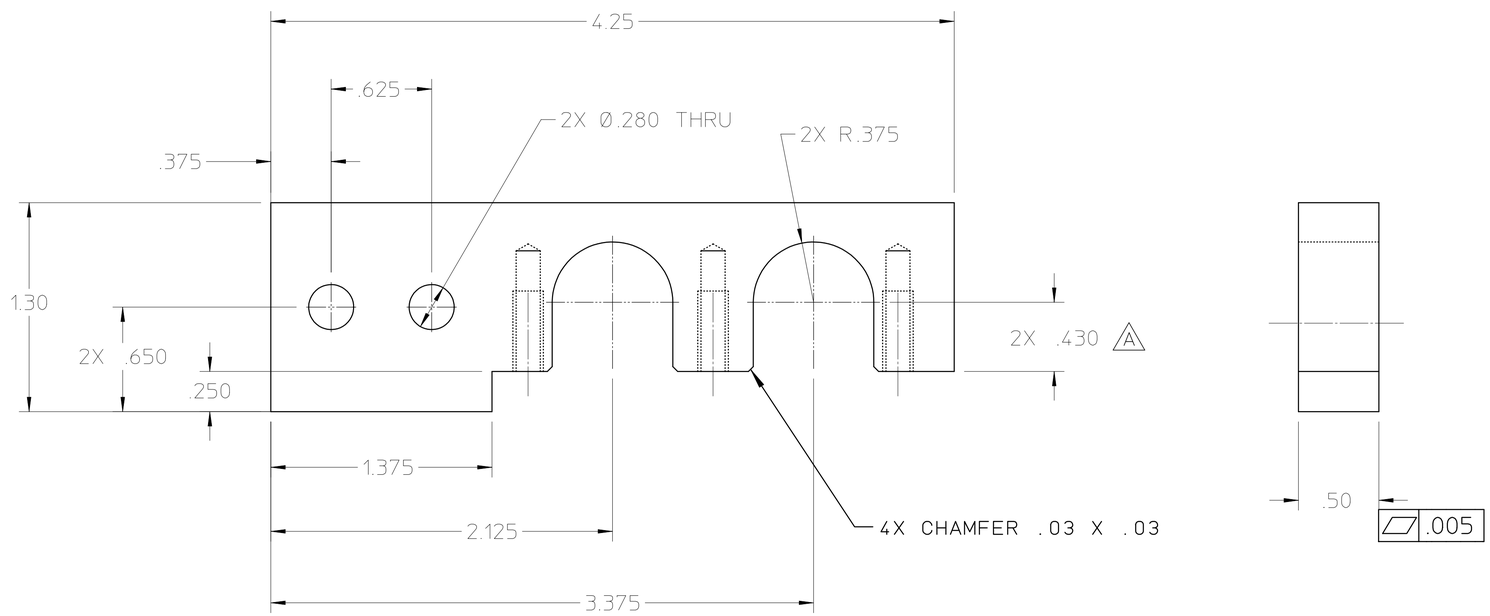

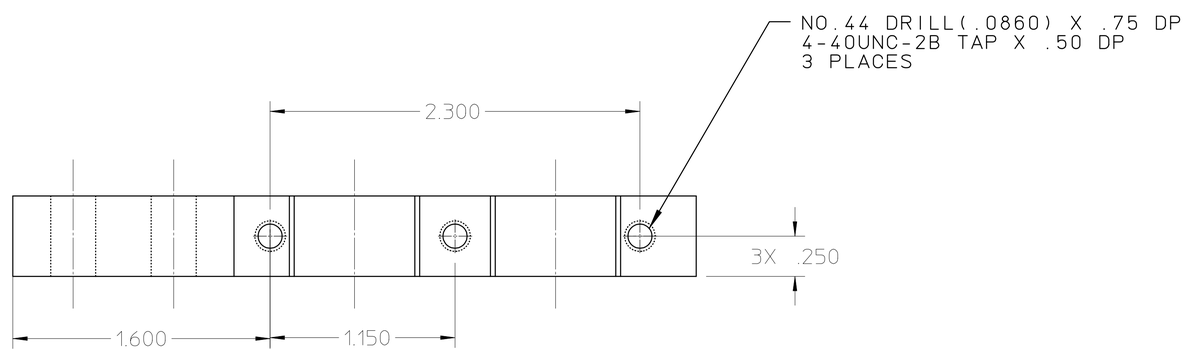

25B1554A

NOTES: 1. ALL DIMENSIONS ARE IN INCHES.

REV	DWG	CHK	ZONE	DATE	CHANGES
A	DPO		C4	11/5/01	2X .430 WAS 2X .300

UNLESS OTHERWISE SPECIFIED

TOLERANCES			
	.X ±	FRAC. ± 1/64	
	.XX ± .02	ANGLES ± 1°	
	.XXX ± .005	FINISH 125√	

THREADS ARE CLASS 2
CHAMFER ENDS OF ALL SCREW THREADS 30°.
CUT 1.5 PITCH THRD RELIEF WITH ROUND NOSE TOOL ON MACHINE CUT THREADS.
BREAK EDGES .016 MAX. ON MACHINED WORK
REMOVE BURRS WELD SPLATTER & LOOSE SCALE
REFERENCES: ANSI Y14.5 & B46.1.

SHOP ORDERS

ACCT. NO.		SERIAL NO.	
DATE ISSD	DATE REQD.	NO. REQD.	
DELIVER TO			
SURFACE TREATMENT	DEGREASE		
IDENT. METH.	TAG		
DWG. BY	Y. MINAMIHARA	DATE	12-15-99
CHK. BY		DATE	

LAWRENCE BERKELEY LABORATORY
UNIVERSITY OF CALIFORNIA-BERKELEY

SNS - FES MEBT

MECHANICAL BEAM TRANSPORT SYSTEMS - QUADS

POWER CABLE BRACKET

PATENT CLEAR	DWG. TYPE	SHOWN ON	SCALE 2X	DO NOT SCALE PRINTS
	DETAIL			
MICROFILMED	DESIGN ACCT. NO.	CATEGORY CODE FE3312	DWG. NO. 25B1554	SIZE A / REV. A

REQ	ITEM	PART NUMBER	DESCRIPTION
			DELRIN

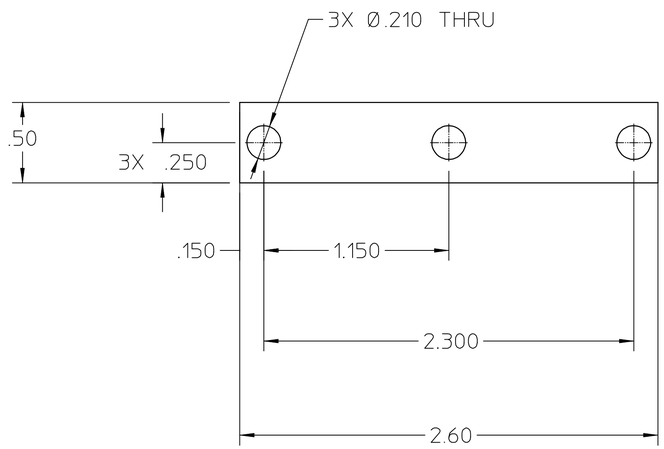

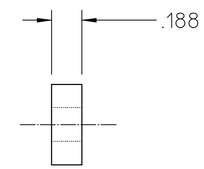

25B1564

NOTES: 1. ALL DIMENSIONS ARE IN INCHES.

REV	DWG	CHK	ZONE	DATE	CHANGES

UNLESS OTHERWISE SPECIFIED

TOLERANCES		
	.X ±	FRAC. ±1/64
	.XX ± .02	ANGLES ±1°
	.XXX ± .005	FINISH 125√

THREADS ARE CLASS 2
CHAMFER ENDS OF ALL SCREW THREADS 30°.
CUT 1.5 PITCH THRD RELIEF WITH ROUND NOSE TOOL ON MACHINE CUT THREADS.
BREAK EDGES .016 MAX. ON MACHINED WORK
REMOVE BURRS WELD SPLATTER & LOOSE SCALE
REFERENCES: ANSI Y14.5 & B46 1

SHOP ORDERS

ACCT. NO.		SERIAL NO.	
DATE ISSD.	DATE REQD.	NO. REQD.	
DELIVER TO			
SURFACE TREATMENT	DEGREASE		
IDENT. METH.	TAG		
DWG. BY	Y. MINAMIHARA	DATE	12-15-99
CHK. BY		DATE	

LAWRENCE BERKELEY LABORATORY
UNIVERSITY OF CALIFORNIA-BERKELEY

SNS - FES MEBT

MECHANICAL BEAM TRANSPORT SYSTEMS - QUADS

CABLE BRACKET STRAP

PATENT CLEAR	DWG. TYPE	SHOWN ON	SCALE 2X	DO NOT SCALE PRINTS
	DETAIL			
MICROFILMED	DESIGN ACCT. NO.	CATEGORY CODE FE3312	DWG. NO. 25B1564	SIZE / REV.

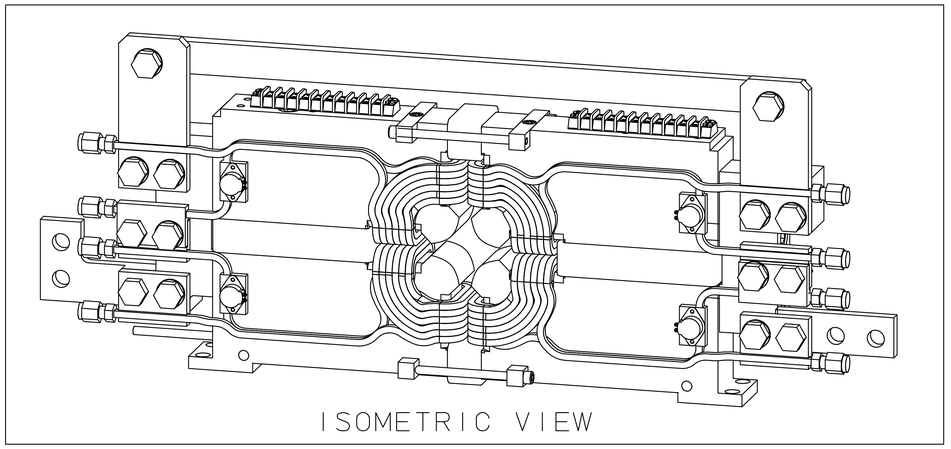

NOTES: 1. ALL DIMENSIONS ARE IN INCHES.

2. ESTIMATED WT.: 70 LBS.

3. USE CAUTION WHEN TIGHTENING BOLTS TO AVOID DAMAGING THE DELRIN COMPONETS.

REQD	ITEM	PART NO.	DESCRIPTION
1	1	25B1346	POLE PIECE ASSEMBLY - 32MM APERATURE
2	2	25B1254	INSULATOR BLOCK
1	3	25B1484	UPPER LEFT COIL ASSEMBLY
1	4	25B1504	LOWER LEFT COIL ASSEMBLY
1	5	25B1494	UPPER RIGHT COIL ASSEMBLY
1	6	25B1514	LOWER RIGHT COIL ASSEMBLY
2	7	25B1464	VERTICAL STEERING COIL
2	8	25B1474	HORIZONTAL STEERING COIL
1	9	25B1414	JUMPER BAR
2	10		TERMINAL BLOCK, KULKA 600A SERIES, STK. #87F5241
1	11	25B1424	L-SHAPED BUS BAR
1	12	25B1434	STRAIGHT BUS BAR
4	13		SCREW, SOC. HD.,1/2-13UNC-2A X 2.25" LONG, SST.
2	14		SCREW, HEX. HD.,1/2-13UNC-2A X 1.50" L., 18-8 SST.
2	15		SCREW, HEX. HD.,1/2-13UNC-2A X 1.75" L., 18-8 SST.
2	16		SCREW, HEX. HD.,1/2-13UNC-2A X 2.00" L., 18-8 SST.
8	17		SCREW, HEX. HD.,1/2-13UNC-2A X 3.00" L., 18-8 SST.
28	18		WASHER, PLAIN, TYPE B, 1/2, 1.00" O.D., SST.
8	19		SCREW, PAN HD., 6-32UNC-2A X .625"L, SST.
A/R	20		RUBBER SHEET, NEOPRENE OR EQUIVALENT
28	21		WASHER, BELLEVILLE, 1.000 OD X .505 ID, .073 THICK
			18-8 STAINLESS STEEL, MASTER CARR #9713 K77
14	22		NUT, HEX, 1/2-13UNC-2B, SST
2	23		SCREW, BUT. HD.,1/4-20UNC-2A X .875" L., 18-8 SST.
3	24		SCREW, BUT. HD.,10-24UNC-2A X .625" L., 18-8 SST.
1	25	25B1554	POWER CABLE BRACKET
1	26	25B1564	CABLE BRACKET STRAP

A1 (items 10)

C1 (items 14–17)

A2 (items 23–26)

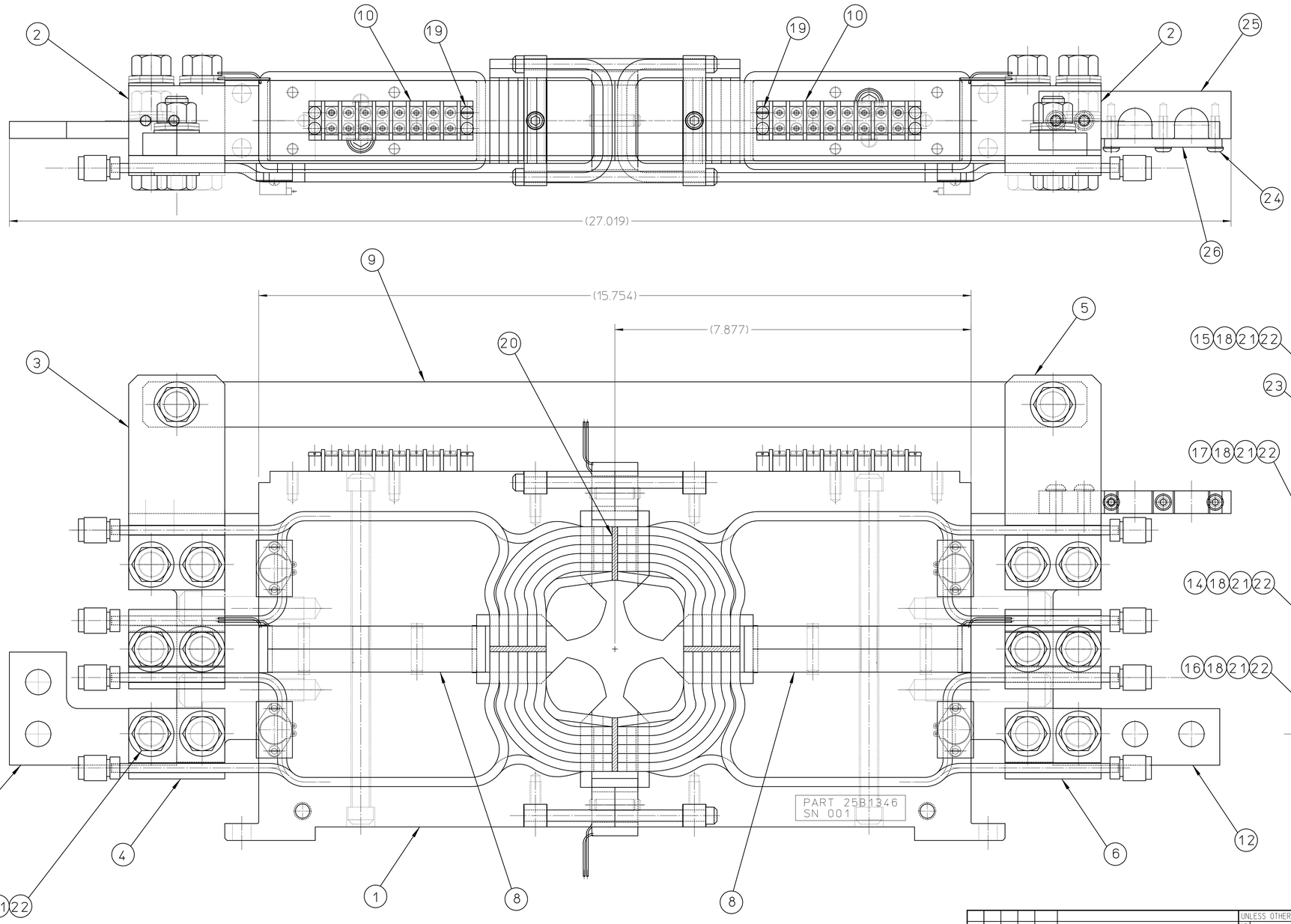

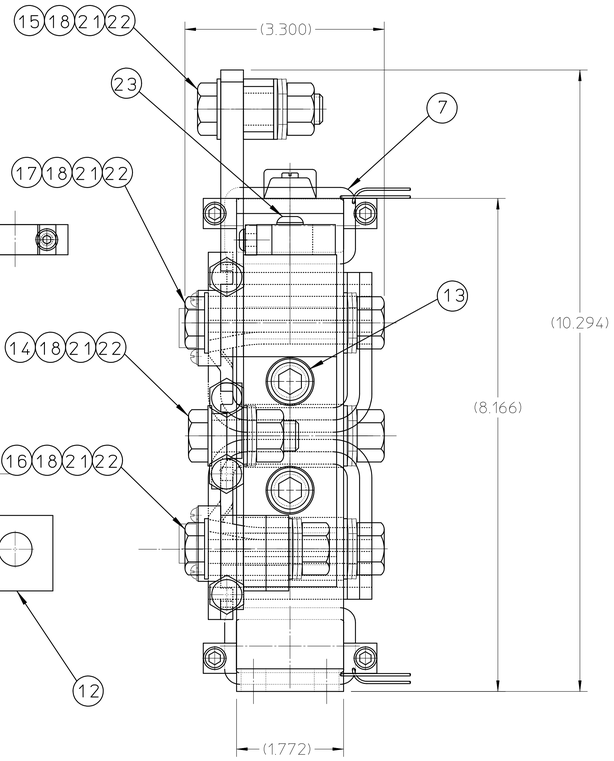

25B1576C

REV	DWG	CHK	ZONE	DATE	CHANGES
C1	YM		D2	3-16-00	SCREWS WERE 1/2-20 UNF-2A.
B1	YM			3-2-00	CHANGED CHAMFER SIZE AND REDUCED BELLEVILLE WASHER QUANTITY
A2	YM		C2	2-1-00	ADDED ITEMS 23, 24, 25 & 26.
A1	YM		D2	2-1-00	WAS PART PART NO.25B1524

UNLESS OTHERWISE SPECIFIED (TOLERANCES): .X ± – ; FRAC. ±1/64 ; .XX ± .02 ; ANGLES ± 1° ; .XXX ± .005 ; FINISH 125√

THREADS ARE CLASS 2
CHAMFER ENDS OF ALL SCREW THREADS 30°
CUT 1.5 PITCH THRD RELIEF WITH ROUND NOSE TOOL ON MACHINE CUT THREADS.
BREAK EDGES .016 MAX. ON MACHINED WORK.
REMOVE BURRS WELD SPLATTER & LOOSE SCALE
REFERENCES: ANSI Y14.5 & B46.1

SHOP ORDERS: ACCT. NO. ; SERIAL NO. ; DATE ISSD. ; DATE REQD. ; NO. REQD. ; DELIVER TO

SURFACE TREATMENT: DEGREASE
IDENT METH.: TAG
DWG BY: Y. MINAMIHARA DATE: 12-15-99
CHK. BY: DATE:

LAWRENCE BERKELEY LABORATORY
UNIVERSITY OF CALIFORNIA-BERKELEY

SNS - FE MEBT
QUADRUPOLE MAGNET
32MM APERATURE QUADRUPOLE WITH STEERING

PATENT CLEAR | DWG. TYPE: ASSEMBLY | SHOWN ON | SCALE: FULL | DO NOT SCALE PRINTS
MICROFILMED | DESIGN ACCT. NO.: 8210-23 | CATEGORY CODE: FE3312 | DWG. NO.: 25B1576 | SIZE | REV.: C

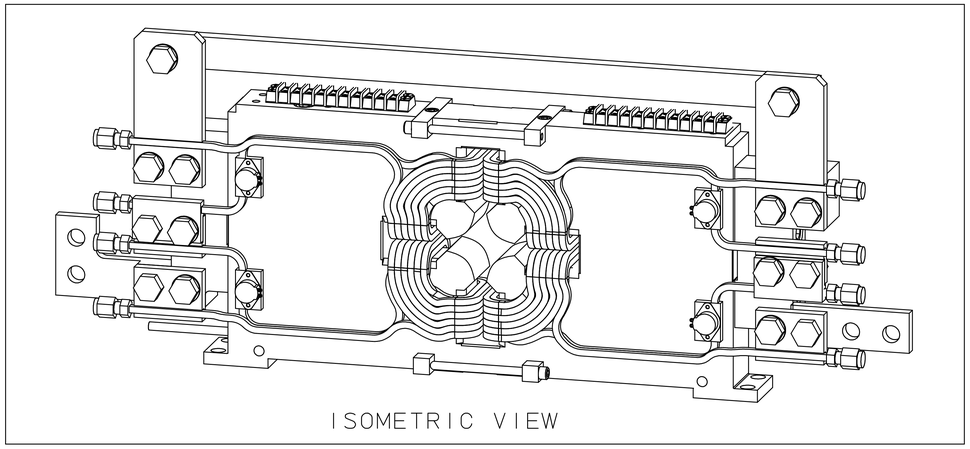

NOTES: 1. ALL DIMENSIONS ARE IN INCHES.

2. ESTIMATED WT.: 70 LBS.

3. USE CAUTION WHEN TIGHTENING BOLTS TO AVOID DAMAGING THE DELRIN COMPONETS.

	REQD	ITEM	PART NO.	DESCRIPTION
	1	1	25B1346	POLE PIECE ASSEMBLY - 32MM APERATURE
	2	2	25B1254	INSULATOR BLOCK
	1	3	25B1484	UPPER LEFT COIL ASSEMBLY
	1	4	25B1504	LOWER LEFT COIL ASSEMBLY
	1	5	25B1494	UPPER RIGHT COIL ASSEMBLY
	1	6	25B1514	LOWER RIGHT COIL ASSEMBLY
A1	1	7	25B1414	JUMPER BAR
A1	2	8		TERMINAL BLOCK, KULKA 600A SERIES, STK. #87F5241
A1	1	9	25B1424	L-SHAPED BUS BAR
A1	1	10	25B1434	STRAIGHT BUS BAR
	4	11		SCREW, SOC. HD., 1/2-13UNC-2A X 2.25" LONG, SST.
C2	2	12		SCREW, HEX. HD., 1/2-13UNC-2A X 1.50" L., 18-8 SST.
C2	2	13		SCREW, HEX. HD., 1/2-13UNC-2A X 1.75" L., 18-8 SST.
C2	2	14		SCREW, HEX. HD., 1/2-13UNC-2A X 2.00" L., 18-8 SST.
C2	8	15		SCREW, HEX. HD., 1/2-13UNC-2A X 3.00" L., 18-8 SST.
	28	16		WASHER, PLAIN, TYPE B, 1/2, 1.00" O.D., SST.
	8	17		SCREW, PAN HD., 6-32UNC-2A X .625"L, SST.
	A/R	18		RUBBER SHEET, NEOPRENE OR EQUIVALENT
	28	19		WASHER, BELLEVILLE, 1.000 OD X .505 ID, .073 THICK
				18-8 STAINLESS STEEL, MASTER CARR #9713 K77
	14	20		NUT, HEX, 1/2-13UNC-2B, SST
A2	2	21		SCREW, BUT. HD., 1/4-20UNC-2A X .875" L., 18-8 SST.
A2	3	22		SCREW, BUT. HD., 10-24UNC-2A X .625" L., 18-8 SST.
	1	23	25B1554	POWER CABLE BRACKET
	1	24	25B1564	CABLE BRACKET STRAP

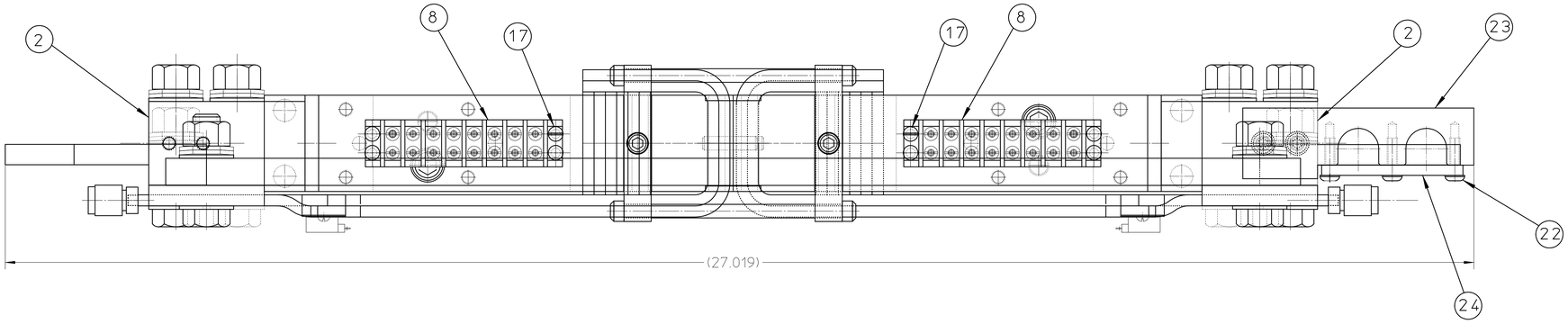

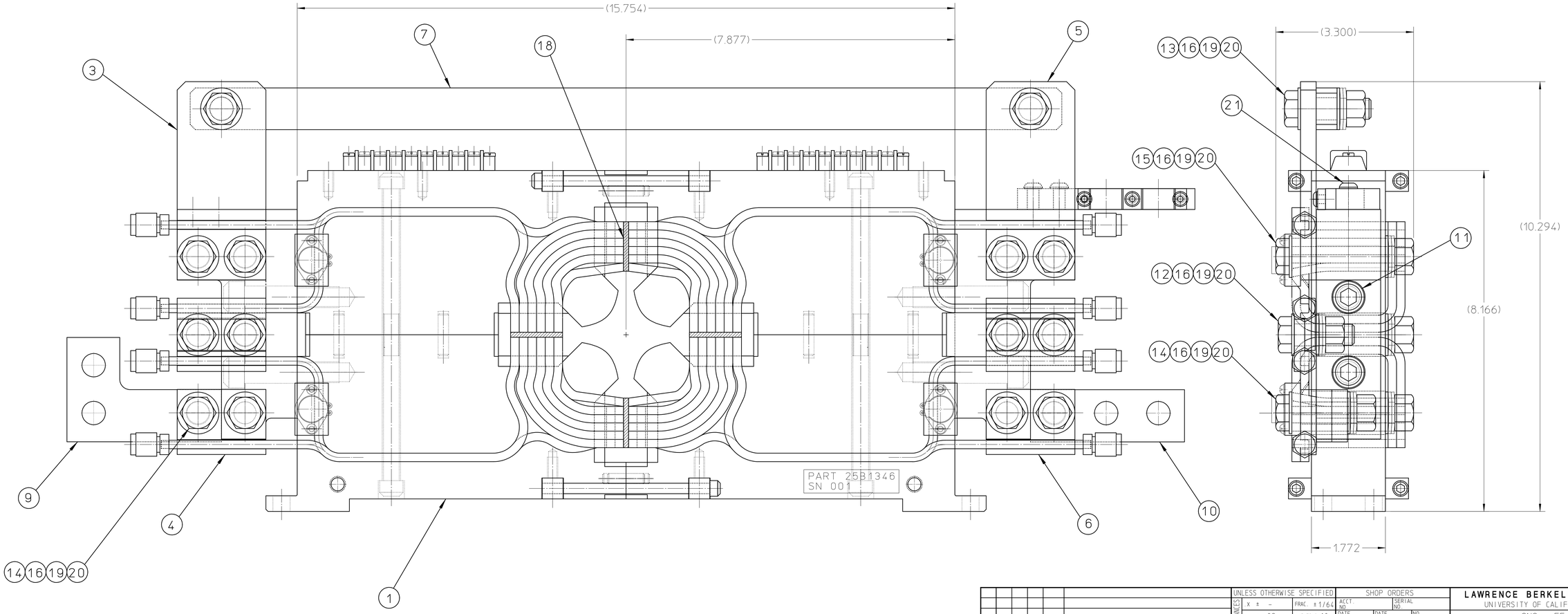

25B1586C

REV	DWG	CHK	ZONE	DATE	CHANGES
D2	YM		D2	3-16-00	SCREWS WERE 1/2-20 UNF-2A.
B1	YM			3-2-00	CHANGED CHAMFER SIZE, REMOVED COIL
					& REDUCED BELLEVILLE WASHER QUANTITY
A2	YM		C2	2-1-00	ADDED ITEMS 21, 22, 23, & 24
A1	YM		D2	2-1-00	WAS PART PART NO.25B1524

UNLESS OTHERWISE SPECIFIED
TOLERANCES: .X ± - FRAC. ± 1/64; .XX ± .02 ANGLES ± 1°; .XXX ± .005 FINISH 125√
THREADS ARE CLASS 2
CHAMFER ENDS OF ALL SCREW THREADS 30°
CUT 1.5 PITCH THRD RELIEF WITH ROUND NOSE TOOL ON MACHINE CUT THREADS.
BREAK EDGES .016 MAX. ON MACHINED WORK
REMOVE BURRS WELD SPLATTER & LOOSE SCALE
REFERENCES: ANSI Y14.5 & B46.1

SHOP ORDERS
ACCT. NO. | SERIAL NO.
DATE ISSD. | DATE REQD. | NO. REQD.
DELIVER TO
SURFACE TREATMENT: DEGREASE
IDENT. METH.: TAG
DWG BY: Y. MINAMIHARA | DATE: 12-15-99
CHK. BY | DATE

LAWRENCE BERKELEY LABORATORY
UNIVERSITY OF CALIFORNIA-BERKELEY

SNS - FE MEBT
QUADRUPOLE MAGNET
32MM APERATURE QUADRUPOLE W/O STEERING

PATENT CLEAR	DWG. TYPE	SHOWN ON	SCALE	DO NOT SCALE PRINTS
	ASSEMBLY		FULL	
MICROFILMED	DESIGN ACCT. NO.	CATEGORY CODE	DWG. NO.	SIZE / REV
		FE3312	25B1586	C

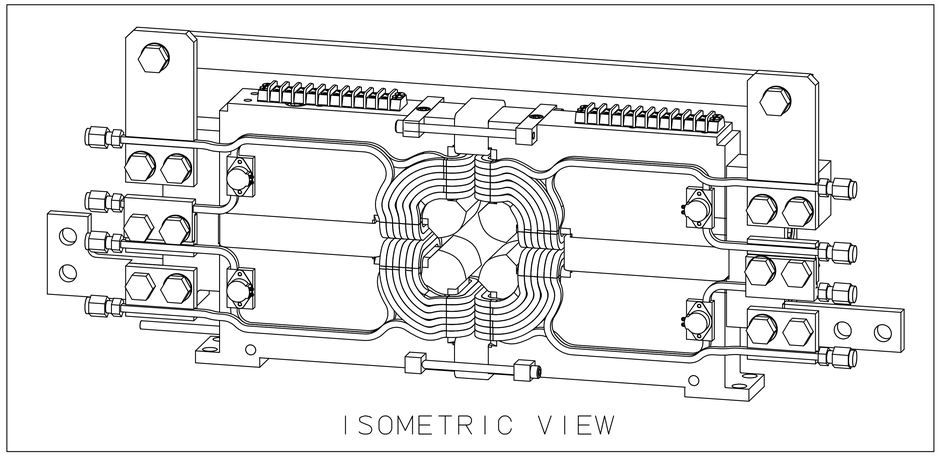

NOTES: 1. ALL DIMENSIONS ARE IN INCHES.

2. ESTIMATED WT. 70 LBS.

3. USE CAUTION WHEN TIGHTENING BOLTS TO AVOID DAMAGING THE DELRIN COMPONETS.

	REQD	ITEM	PART NO.	DESCRIPTION
	1	1	25B1366	POLE PIECE ASSEMBLY - 42MM APERATURE
	2	2	25B1254	INSULATOR BLOCK
	1	3	25B1484	UPPER LEFT COIL ASSEMBLY
	1	4	25B1504	LOWER LEFT COIL ASSEMBLY
	1	5	25B1494	UPPER RIGHT COIL ASSEMBLY
	1	6	25B1514	LOWER RIGHT COIL ASSEMBLY
	2	7	25B1464	VERTICAL STEERING COIL
	2	8	25B1474	HORIZONTAL STEERING COIL
	1	9	25B1414	JUMPER BAR
A1	2	10		TERMINAL BLOCK, KULKA 600A SERIES, STK. #87F5241
	1	11	25B1424	L-SHAPED BUS BAR
	1	12	25B1434	STRAIGHT BUS BAR
	4	13		SCREW, SOC. HD.,1/2-13UNC-2A X 2.25" LONG, SST.
C1	2	14		SCREW, HEX. HD.,1/2-13UNC-2A X 1.50" L., 18-8 SST
	2	15		SCREW, HEX. HD.,1/2-13UNC-2A X 1.75" L., 18-8 SST
	2	16		SCREW, HEX. HD.,1/2-13UNC-2A X 2.00" L., 18-8 SST
	8	17		SCREW, HEX. HD.,1/2-13UNC-2A X 3.00" L., 18-8 SST
	28	18		WASHER, PLAIN, TYPE B, 1/2, 1.00" O.D., SST.
	8	19		SCREW, PAN HD., 6-32UNC-2A X .625"L, SST.
	A/R	20		RUBBER SHEET, NEOPRENE OR EQUIVALENT
	28	21		WASHER, BELLEVILLE, 1.000 OD X .505 ID, .073 THICK
				18-8 STAINLESS STEEL, MASTER CARR #9713 K77
	14	22		NUT, HEX, 1/2-13UNC-2B, SST
A2	2	23		SCREW, BUT. HD.,1/4-20UNC-2A X .875" L., 18-8 SST.
	3	24		SCREW, BUT. HD.,10-24UNC-2A X .625" L., 18-8 SST.
	1	25	25B1554	POWER CABLE BRACKET
	1	26	25B1564	CABLE BRACKET STRAP

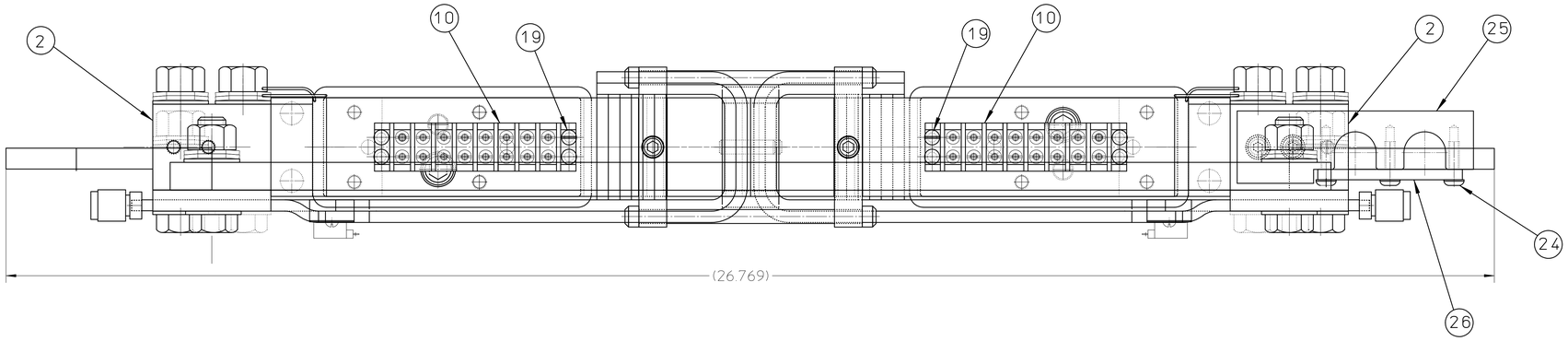

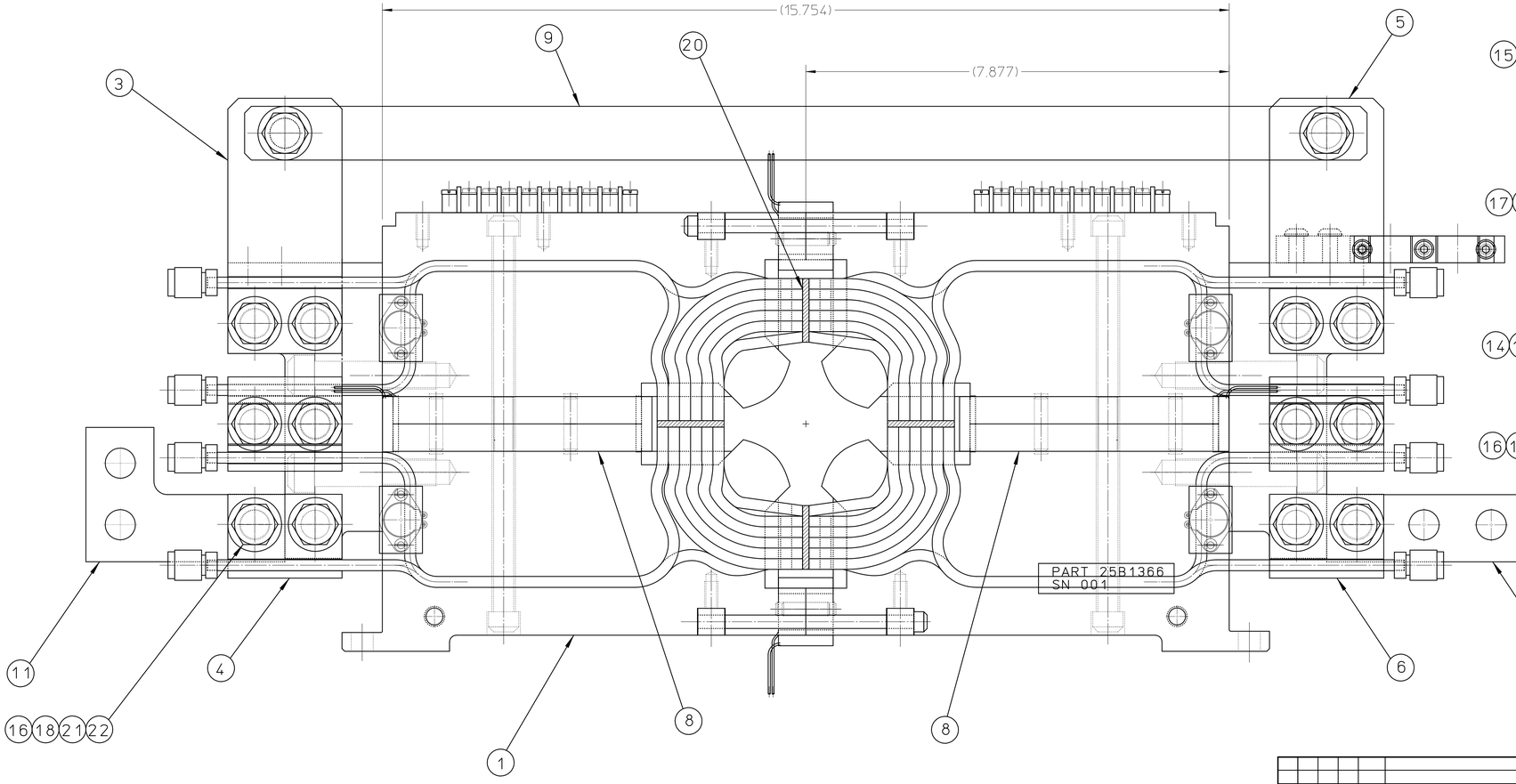

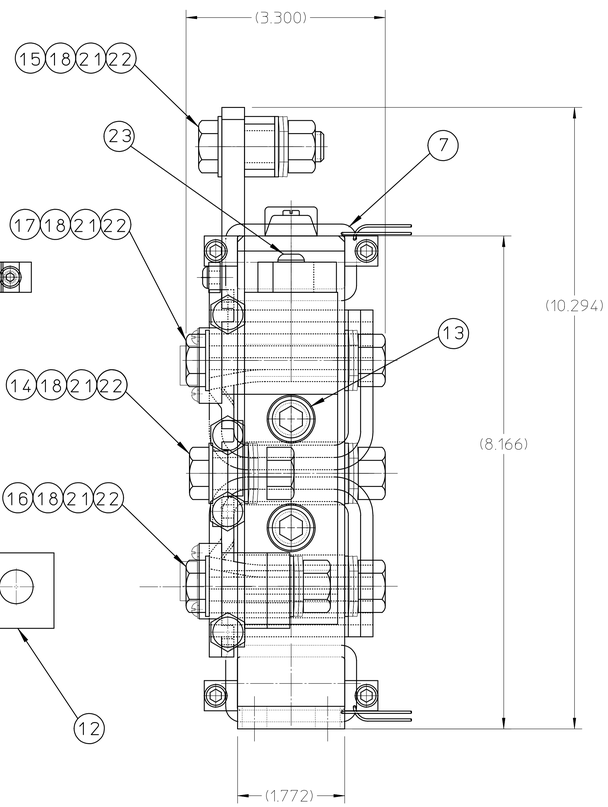

25B1596C

C1	YM		D2	3-16-00	SCREWS WERE 1/2-20 UNF-2A.
B1	YM			3-2-00	CHANGED CHAMFER SIZE AND
					REDUCED BELLEVILLE QUANTITY
A2	YM		C2	2-1-00	ADDED ITEMS 23, 24, 25 & 26.
A1	YM		D2	2-1-00	WAS PART PART NO 25B1524
REV	DWG	CHK	ZONE	DATE	CHANGES

UNLESS OTHERWISE SPECIFIED
TOLERANCES: .X ± - FRAC. ± 1/64; .XX ± .02 ANGLES ± 1°; .XXX ± .005 FINISH 125√
THREADS ARE CLASS 2
CHAMFER ENDS OF ALL SCREW THREADS 30°
CUT 1.5 PITCH THRD RELIEF WITH ROUND NOSE TOOL ON MACHINE CUT THREADS.
BREAK EDGES .016 MAX. ON MACHINED WORK
REMOVE BURRS WELD SPLATTER & LOOSE SCALE
REFERENCES: ANSI Y14.5 & B46.1

SHOP ORDERS
ACCT. NO. | SERIAL NO.
DATE ISSD | DATE REQD | NO. REQD
DELIVER TO
SURFACE TREATMENT: DEGREASE
IDENT. METH.: TAG
DWG BY: Y. MINAMIHARA DATE: 12-15-99
CHK. BY: DATE

LAWRENCE BERKELEY LABORATORY
UNIVERSITY OF CALIFORNIA-BERKELEY

SNS - FE MEBT
QUADRUPOLE MAGNET
42MM APERATURE QUADRUPOLE WITH STEERING

PATENT CLEAR | DWG. TYPE: ASSEMBLY | SHOWN ON | SCALE: FULL | DO NOT SCALE PRINTS
MICROFILMED | DESIGN ACCT. NO. | CATEGORY CODE: FE3312 | DWG. NO. 25B1596 | SIZE | REV C

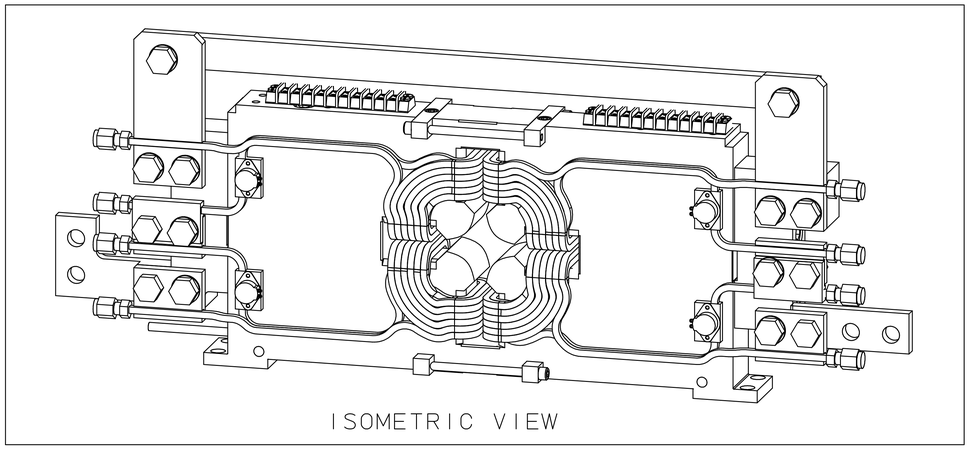

NOTES: 1. ALL DIMENSIONS ARE IN INCHES.

2. ESTIMATED WT. 70 LBS.

3. USE CAUTION WHEN TIGHTENING BOLTS TO AVOID DAMAGING THE DELRIN COMPONETS.

	REQD	ITEM	PART NO.	DESCRIPTION
	1	1	25B1346	POLE PIECE ASSEMBLY - 32MM APERATURE
	2	2	25B1254	INSULATOR BLOCK
	1	3	25B1484	UPPER LEFT COIL ASSEMBLY
	1	4	25B1504	LOWER LEFT COIL ASSEMBLY
	1	5	25B1494	UPPER RIGHT COIL ASSEMBLY
	1	6	25B1514	LOWER RIGHT COIL ASSEMBLY
	1	7	25B1414	JUMPER BAR
A1	2	8		TERMINAL BLOCK, KULKA 600A SERIES, STK. #87F5241
	1	9	25B1424	L-SHAPED BUS BAR
	1	10	25B1434	STRAIGHT BUS BAR
	4	11		SCREW, SOC. HD., 1/2-13UNC-2A X 2.25" LONG, SST.
C1	2	12		SCREW, HEX. HD., 1/2-13UNC-2A X 1.50" L., 18-8 SST.
	2	13		SCREW, HEX. HD., 1/2-13UNC-2A X 1.75" L., 18-8 SST.
	2	14		SCREW, HEX. HD., 1/2-13UNC-2A X 2.00" L., 18-8 SST.
	8	15		SCREW, HEX. HD., 1/2-13UNC-2A X 3.00" L., 18-8 SST.
	28	16		WASHER, PLAIN, TYPE B, 1/2, 1.00" O.D., SST.
	8	17		SCREW, PAN HD., 6-32UNC-2A X .625"L, STT.
	A/R	18		RUBBER SHEET, NEOPRENE OR EQUIVALENT
	28	19		WASHER, BELLEVILLE, 1.000 OD X .505 ID, .073 THICK
				18-8 STAINLESS STEEL, MASTER CARR #9713 K77
	14	20		NUT, HEX, 1/2-13UNC-2B, SST
A2	2	21		SCREW, BUT. HD., 1/4-20UNC-2A X .875" L., 18-8 SST.
	3	22		SCREW, BUT. HD., 10-24UNC-2A X .625" L., 18-8 SST.
	1	23		POWER CABLE BRACKET
	1	24		CABLE BRACKET STRAP

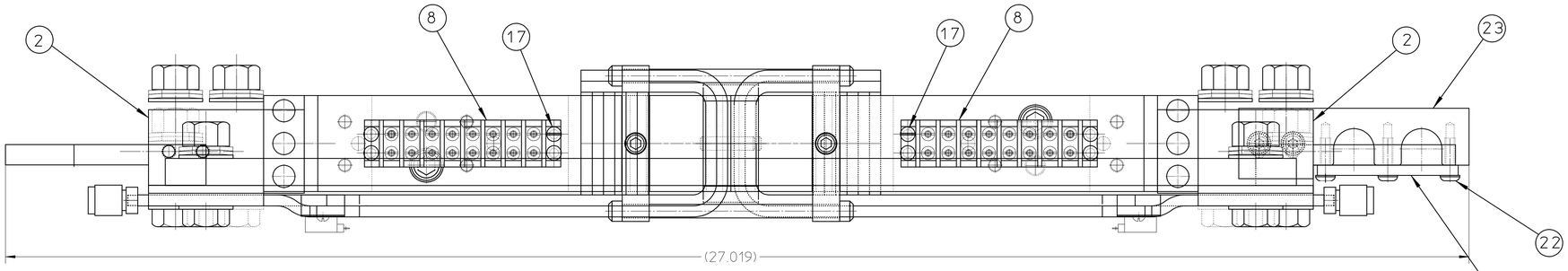

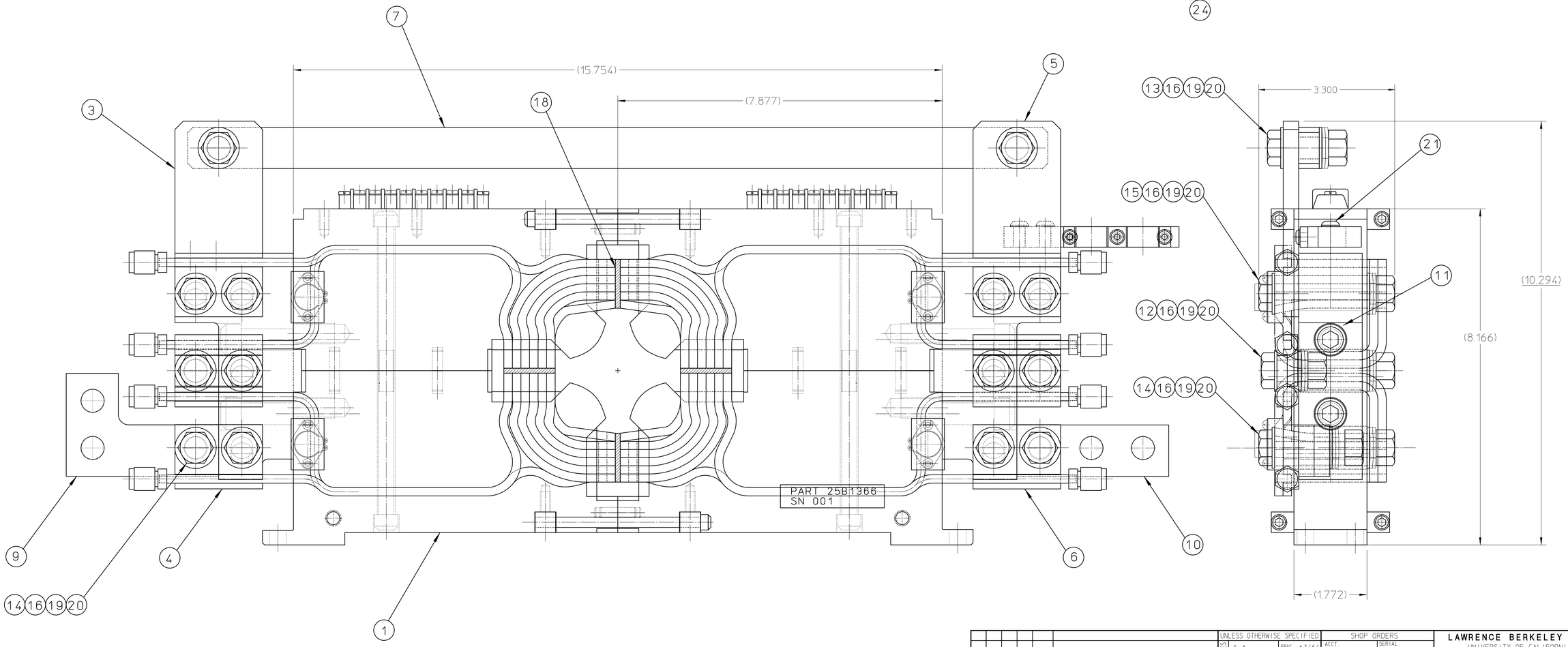

25B1606C

REV	DWG	CHK	ZONE	DATE	CHANGES
C1	YM			3-16-00	SCREWS WERE 1/2-20 UNF-2A.
B1	YM			3-2-00	CHANGED CHAMFER SIZE, REMOVED COIL
					& REDUCED BELLEVILLE WASHER QUANTITY
A2	YM		C2	2-1-00	ADDED ITEMS 21, 22, 23, & 24
A1	YM		D2	2-1-00	WAS PART PART NO 25B1524

UNLESS OTHERWISE SPECIFIED
TOLERANCES: .X ± – FRAC. ± 1/64; .XX ± .02 ANGLES ± 1°; .XXX ± .005 FINISH 125√
THREADS ARE CLASS 2
CHAMFER ENDS OF ALL SCREW THREADS 30°
CUT 1.5 PITCH THRD RELIEF WITH ROUND NOSE TOOL ON MACHINE CUT THREADS.
BREAK EDGES .016 MAX. ON MACHINED WORK.
REMOVE BURRS WELD SPLATTER & LOOSE SCALE
REFERENCES: ANSI Y14.5 & B46.1

SHOP ORDERS
ACCT. NO. | SERIAL NO.
DATE ISSD | DATE REQD | NO REQD
DELIVER TO
SURFACE TREATMENT: DEGREASE
IDENT METH: TAG
DWG BY: Y. MINAMIHARA DATE 12-15-99
CHK BY | DATE

LAWRENCE BERKELEY LABORATORY
UNIVERSITY OF CALIFORNIA-BERKELEY

SNS - FE MEBT
QUADRUPOLE MAGNET
42MM APERATURE QUADRUPOLE W/O STEERING

PATENT CLEAR | DWG. TYPE: ASSEMBLY | SHOWN ON | SCALE: FULL | DO NOT SCALE PRINTS
MICROFILMED | DESIGN ACCT. NO.: 8210-23 | CATEGORY CODE: FE3312 | DWG. NO.: 25B1606 | SIZE | REV.: C

REQ	ITEM	PART NUMBER	DESCRIPTION
1	REF	25B1284A	LEFT COIL WINDING

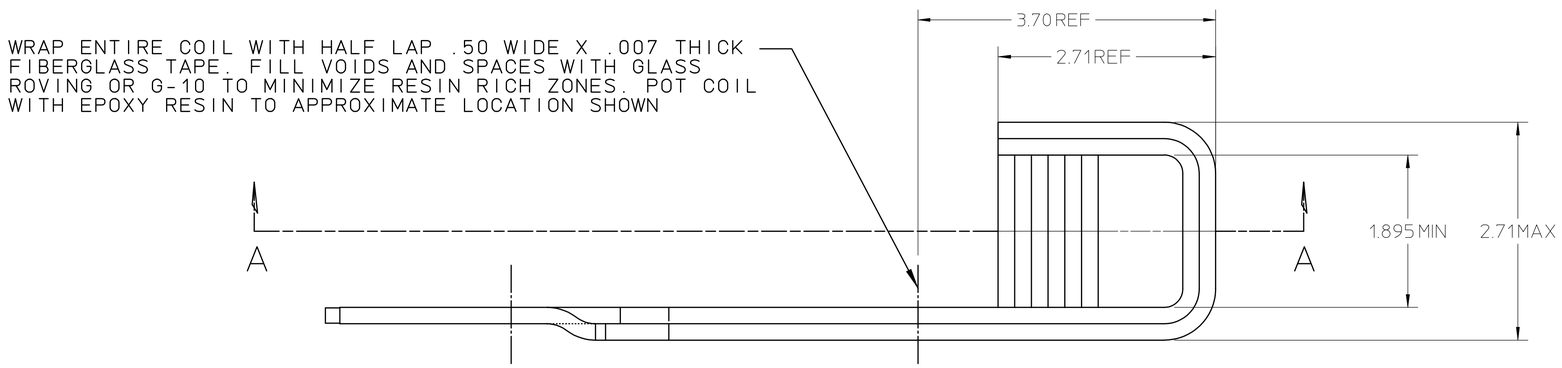

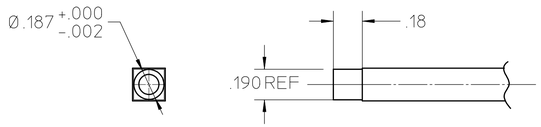

ROUND OFF LEAD ENDS TO Ø.187 (MUST FIT INTO Ø.188 HOLE)

VIEW B
SCALE: 2X
2 PLACES

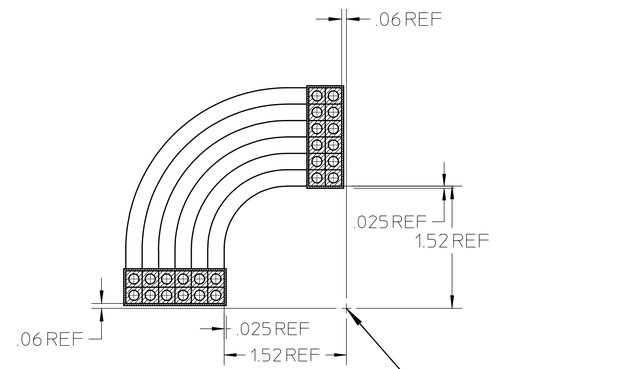

SECTION A - A

ORIGIN 0, 0

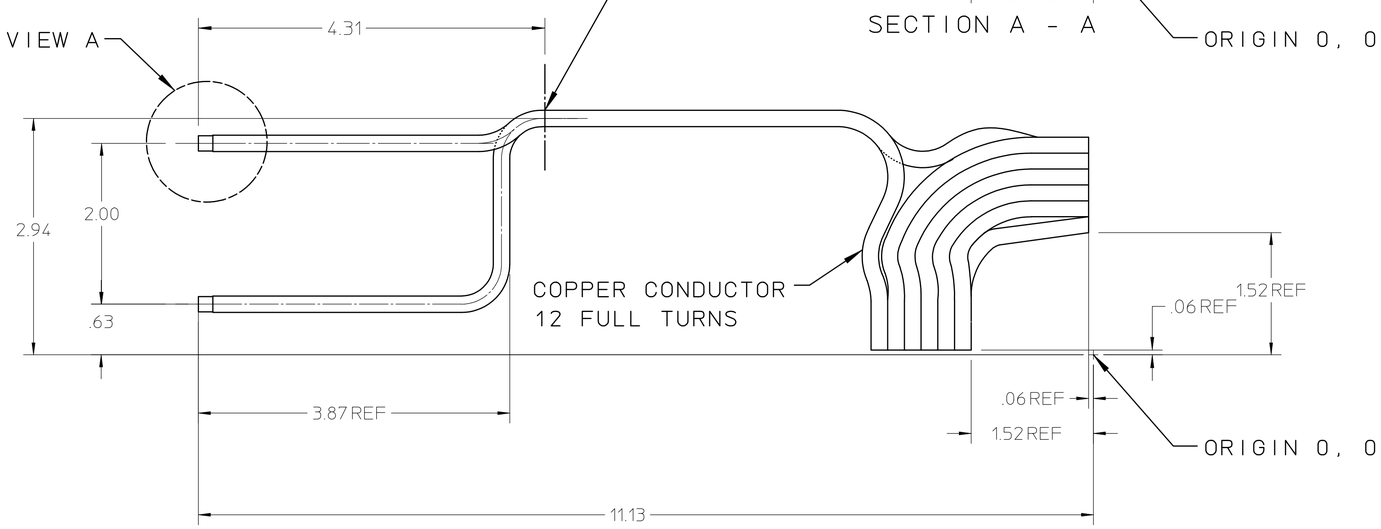

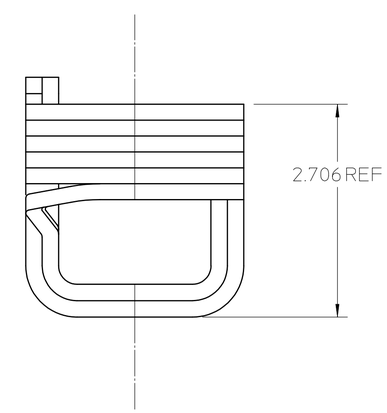

25B1614

NOTES:
1. ALL DIMENSIONS ARE IN INCHES.
2. PROTECT COIL AT ALL TIMES FROM DAMAGE AND DEBRIS.
3. PLUG AND WRAP THE TUBE ENDS WITH CLEAN CLOTH OR PAPER.

REV	DWG	CHK	ZONE	DATE	CHANGES

UNLESS OTHERWISE SPECIFIED
TOLERANCES: .X ± - ; FRAC. ± 1/64 ; .XX ± .02 ; ANGLES ± 1° ; .XXX ± .005 ; FINISH 125√
THREADS ARE CLASS 2
CHAMFER ENDS OF ALL SCREW THREADS 30° CUT 1.5 PITCH THRD RELIEF WITH ROUND NOSE TOOL ON MACHINE CUT THREADS.
BREAK EDGES .016 MAX. ON MACHINED WORK
REMOVE BURRS WELD SPLATTER & LOOSE SCALE
REFERENCES: ANSI Y14.5 & B46.1.

SHOP ORDERS
ACCT. NO. | SERIAL NO.
DATE ISSD. | DATE REQD. | NO. REQD.
DELIVER TO
SURFACE TREATMENT: DEGREASE
IDENT. METH.: TAG
DWG. BY: Y. MINAMIHARA | DATE: 3-6-00
CHK. BY | DATE

LAWRENCE BERKELEY LABORATORY
UNIVERSITY OF CALIFORNIA-BERKELEY
SNS - FES MEBT
MECHANICAL BEAM TRANSPORT SYSTEMS - QUADS
LEFT COIL WINDING - TERMIANL DETAIL

PATENT CLEAR	DWG. TYPE	SHOWN ON	SCALE	DO NOT SCALE PRINTS
	DETAIL		FULL	
MICROFILMED	DESIGN ACCT. NO.	CATEGORY CODE	DWG. NO.	SIZE / REV.
		FE3312	25B1614	

REQ	ITEM	PART NUMBER	DESCRIPTION
1	REF	25B1294A	RIGHT COIL WINDING

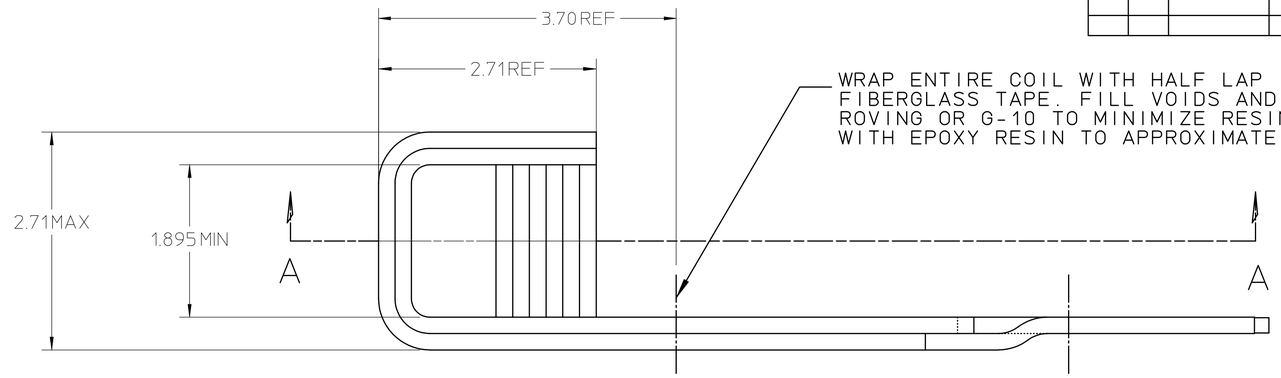

WRAP ENTIRE COIL WITH HALF LAP .50 WIDE X .007 THICK FIBERGLASS TAPE. FILL VOIDS AND SPACES WITH GLASS ROVING OR G-10 TO MINIMIZE RESIN RICH ZONES. POT COIL WITH EPOXY RESIN TO APPROXIMATE LOCATION SHOWN

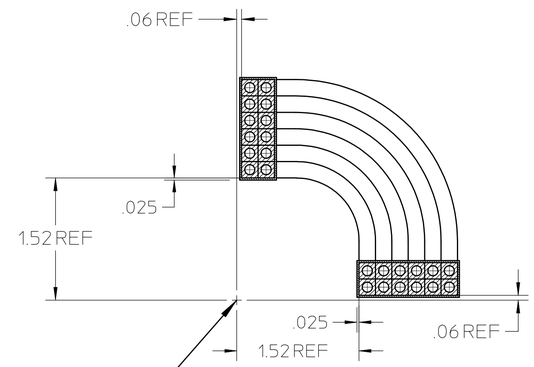

ORIGIN 0, 0

SECTION A - A

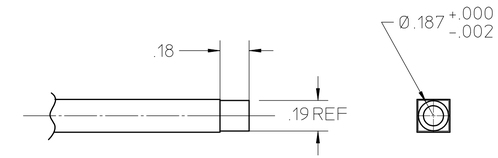

VIEW B
SCALE: 2X
2 PLACES

ROUND OFF LEAD ENDS TO Ø.187 (MUST FIT INTO Ø.188 HOLE)

REMOVE INSULATION TO APPROXIMATE LOCATION

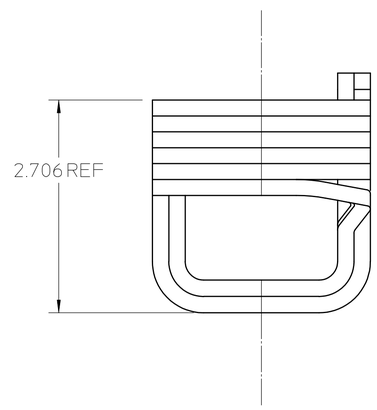

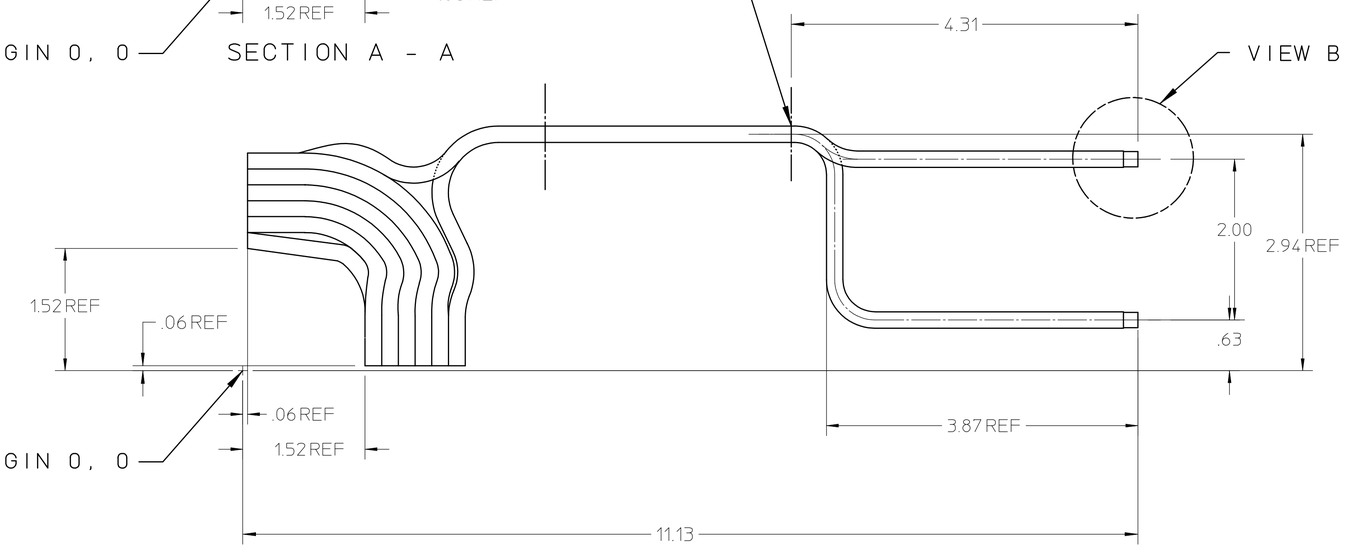

ORIGIN 0, 0

25B1624

NOTES:
1. ALL DIMENSIONS ARE IN INCHES.
2. PROTECT COIL AT ALL TIMES FROM DAMAGE AND DEBRIS.
3. PLUG AND WRAP THE TUBE ENDS WITH CLEAN CLOTH OR PAPER.

REV	DWG	CHK	ZONE	DATE	CHANGES

UNLESS OTHERWISE SPECIFIED
TOLERANCES: .X ± – ; FRAC. ± 1/64 ; .XX ± .02 ; ANGLES ± 1° ; .XXX ± .005 ; FINISH 125√
THREADS ARE CLASS 2
CHAMFER ENDS OF ALL SCREW THREADS 30°.
CUT 1.5 PITCH THRD RELIEF WITH ROUND NOSE TOOL ON MACHINE CUT THREADS.
BREAK EDGES .016 MAX. ON MACHINED WORK
REMOVE BURRS WELD SPLATTER & LOOSE SCALE
REFERENCES: ANSI Y14.5 & B46.1.

SHOP ORDERS
ACCT. NO. | SERIAL NO.
DATE ISSD. | DATE REQD. | NO. REQD.
DELIVER TO
SURFACE TREATMENT: DEGREASE
IDENT. METH: TAG
DWG. BY: Y. MINAMIHARA | DATE 3-6-00
CHK. BY | DATE

LAWRENCE BERKELEY LABORATORY
UNIVERSITY OF CALIFORNIA-BERKELEY
SNS - FES MEBT
MECHANICAL BEAM TRANSPORT SYSTEMS - QUADS
RIGHT COIL WINDING - TERMINAL DETAIL

PATENT CLEAR	DWG. TYPE	SHOWN ON	SCALE	DO NOT SCALE PRINTS
	DETAIL		FULL	
MICROFILMED	DESIGN ACCT. NO.	CATEGORY CODE	DWG. NO.	SIZE / REV.
		FE3312	25B1624	

NOTE: "*" DENOTES CURVED LEAD FROM COIL

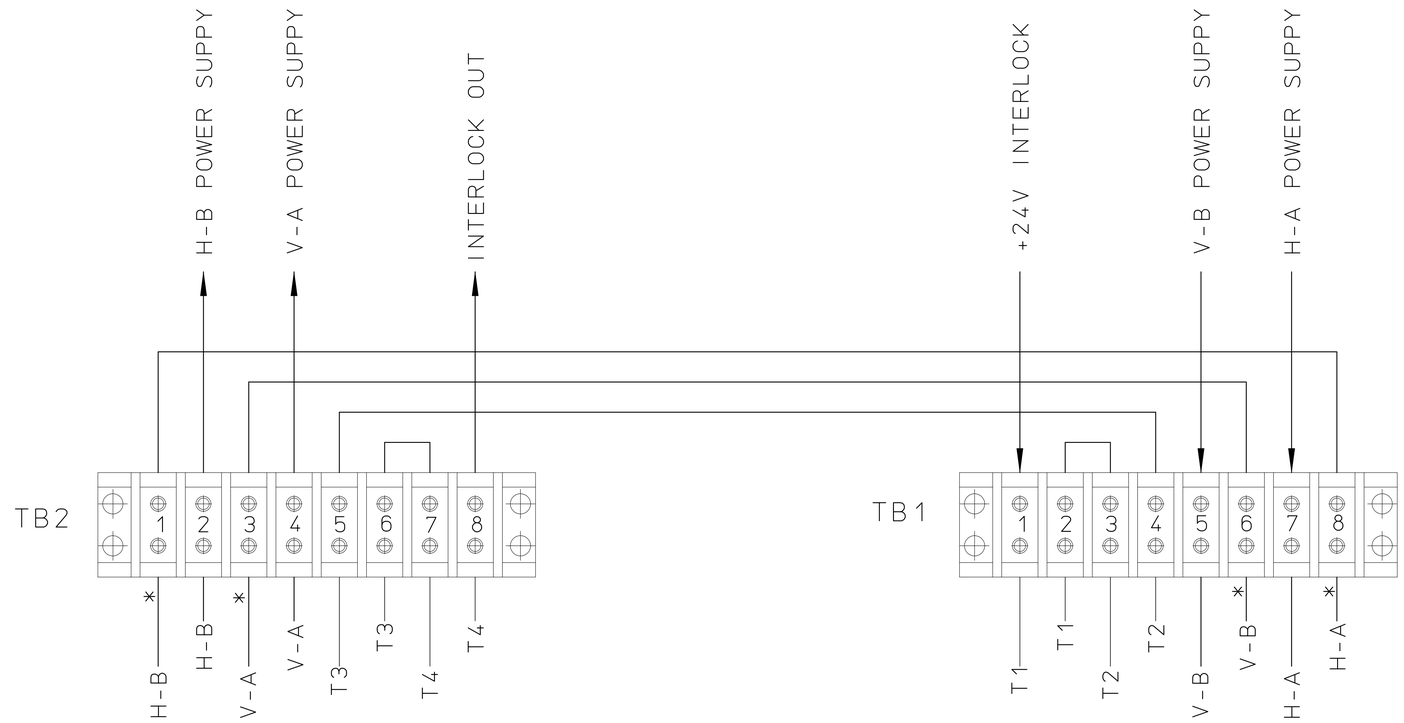

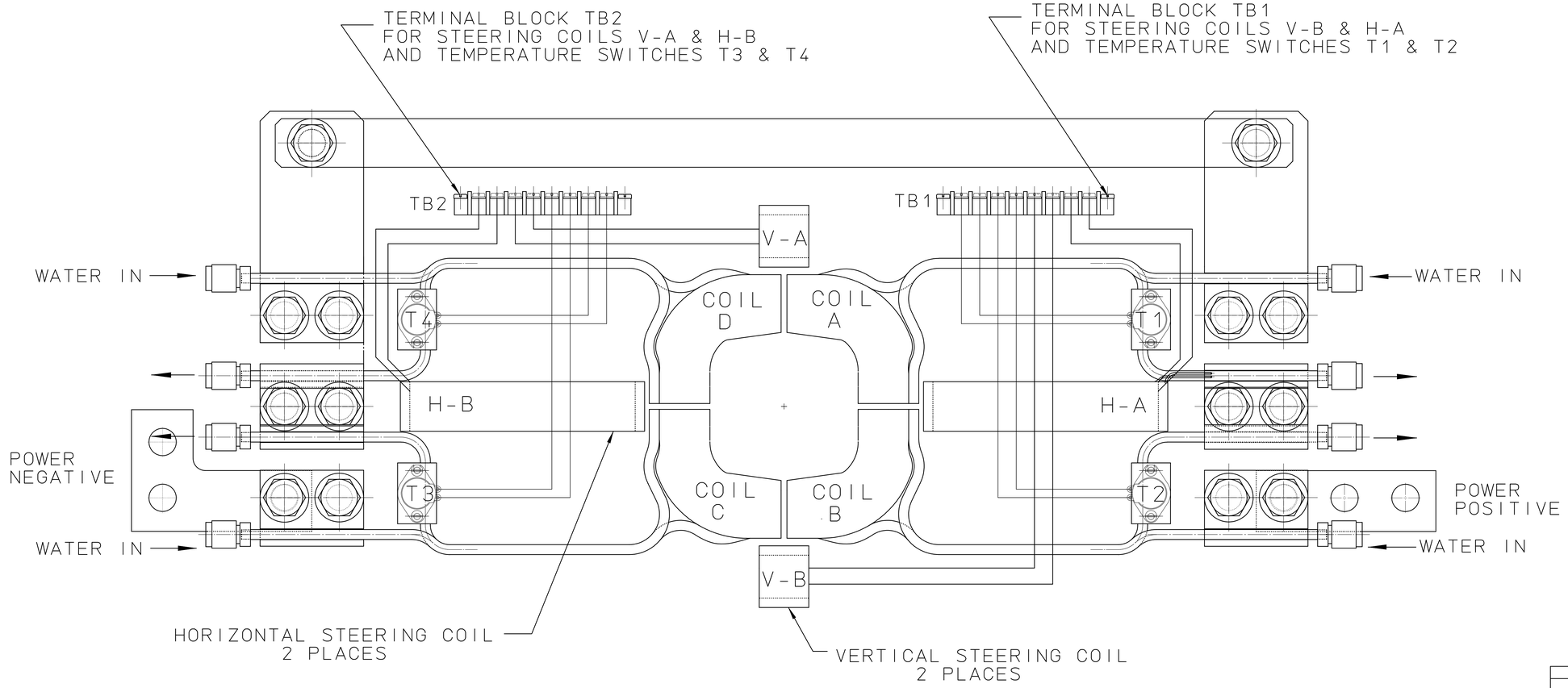

25B4186

REV	DWG	CHK	ZONE	DATE	CHANGES

REQD	ITEM	PART NO.	DESCRIPTION

UNLESS OTHERWISE SPECIFIED
TOLERANCES: .X ± FRAC. ±1/64; .XX ± ANGLES ± 1°; .XXX ± FINISH 125√
THREADS ARE CLASS 2
CHAMFER ENDS OF ALL SCREW THREADS 30° (UI 1.5 PITCH THD) RELIEF WITH ROUND NOSE TOOL ON MACHINE CUT THREADS.
BREAK EDGES .016 MAX. ON MACHINED WORK.
REMOVE BURRS WELD SPLATTER & LOOSE SCALE
REFERENCES: ANSI Y14.5 & B46.1

SHOP ORDERS
ACCT. NO. | SERIAL NO.
DATE ISSD | DATE REQD. | NO. REQD.
DELIVER TO
SURFACE TREATMENT DEGREASE
IDENT METH. TAG
DWG BY Y. Minamihara DATE 9-8-00
CHK. BY DATE

LAWRENCE BERKELEY LABORATORY
UNIVERSITY OF CALIFORNIA-BERKELEY

SNS -FE
MECHANICAL BEAM TRANSPORT SYSTEMS - QUADS
POWER AND WATER CONNECTIONS

PATENT CLEAR | DWG. TYPE LAYOUT | SHOWN ON | SCALE FULL | DO NOT SCALE PRINTS
MICROFILMED | DESIGN ACCT. NO. | CATEGORY CODE FE3312 | DWG. NO. 25B4186 | SIZE | REV.

REQ	ITEM	PART NUMBER	DESCRIPTION

MEBT QUADRUPOLE WIRING

25B4193

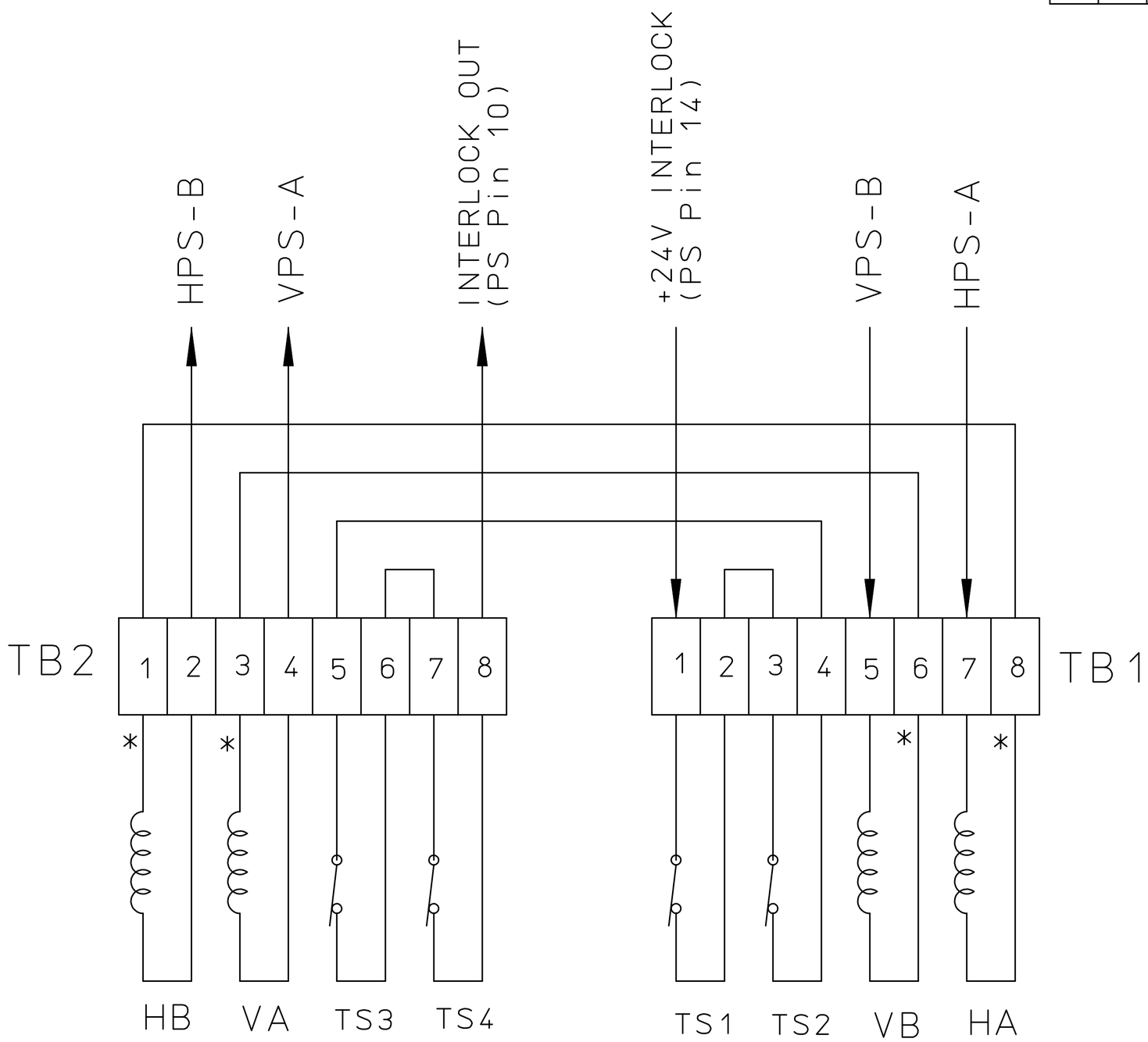

NOTE: TS = TEMP. KLIXON STRIP
TB = 8 PT. TERMINAL BLOCK
HPS = HORIZONTAL STEERING COIL POWER SUPPLY
VPS = VERTICAL STEERING COIL POWER SUPPLY
* = Curved Lead

REV	DWG	CHK	ZONE	DATE	CHANGES

UNLESS OTHERWISE SPECIFIED

TOLERANCES			
	.X ± -	FRAC. ±1/64	
	.XX ± -	ANGLES ±.01°	
	.XXX ± -	FINISH 125√	

THREADS ARE CLASS 2
CHAMFER ENDS OF ALL SCREW THREADS 30°.
CUT 1.5 PITCH THRD RELIEF WITH ROUND NOSE TOOL ON MACHINE CUT THREADS.
BREAK EDGES .016 MAX. ON MACHINED WORK
REMOVE BURRS WELD SPLATTER & LOOSE SCALE
REFERENCES: ANSI Y14.5 & B46.1.

SHOP ORDERS

ACCT. NO.	SERIAL NO.	
DATE ISSD	DATE REQD.	NO. REQD.
DELIVER TO		
SURFACE TREATMENT		
IDENT. METH.		
DWG. BY Y. Minamihara	DATE 9-11-00	
CHK. BY	DATE	

LAWRENCE BERKELEY LABORATORY
UNIVERSITY OF CALIFORNIA-BERKELEY

SNS -FE

MECHANICAL BEAM TRANSPORT SYSTEMS - QUADS

TERMINAL BLOCK WIRING

PATENT CLEAR	DWG. TYPE	SHOWN ON	SCALE NONE	DO NOT SCALE PRINTS
	-			
MICROFILMED	DESIGN ACCT. NO.	CATEGORY CODE FE3312	DWG. NO. 25B4193	SIZE / REV.